OPERATOR'S MANUAL

1225 Ground Drive Spreader

Part #91710
Rev. #03
HSMFG121024

Starting Ser. # 422GD25001

CONTENTS

Warranty 1
Manufacturer's Statement 2
Warranty Registration Form 3
Dealer Pre-Delivery Checklist 5
Dealer Delivery Checklist 7
Safety Information - Be Alert Symbol 9-11
Cap Screw Torque Values 12
Transporting. 13
Adjustments 14-15
Optional Equipment 16
Lubrication Guide 17-19
Decal Location 20
Safety Location 21-26
Troubleshooting 27
Service Notes 28-29

H&S WARRANTY

H&S Manufacturing Co., Inc. (“H&S”) warrants this product to be free from defect in material and workmanship. Except as noted below, this warranty term is twelve (12) months on parts and labor, and twenty-four (24) months on parts only from the date of delivery of the product to the original purchaser by an authorized H&S dealer. Under this warranty, H&S will repair or replace, at its option, any covered part which is found to be defective in material or workmanship during the applicable warranty term. In no case will the covered repair cost of a part or parts exceed the replacement cost of that part. In no case, unless pre-authorized by H&S, will a component be replaced versus repaired unless the cost of labor and parts exceeds 75% of the cost of a new component. Warranty repairs must be performed by H&S or a dealer authorized by H&S to sell and/or service the product involved, and will use only new or remanufactured parts or components furnished by H&S. Any warranty repairs needing to be performed by a third party must be pre-authorized by H&S. Standard freight costs will be covered by H&S for any part used to make a warrantable repair, any form of express freight will not be covered unless pre-authorized by H&S. This warranty includes approved parts and labor to repair the product but does not include, and the purchaser is responsible for, any service call and/or transportation of the product to and from the dealer’s place of business, for any costs related to travel, for any premium charged for overtime labor requested by the purchaser, and for any service work not directly related to any defect covered under this warranty.
This warranty includes only those components of the product manufactured by H&S. Warranty for any component not manufactured by H&S including, but not limited to, engines, batteries, tires, rims, hydraulic motors, pumps, etc. are covered by the warranty, if any, provided separately by their respective manufacturers. H&S reserves the right to request the return of any failed component.

This warranty in all its parts is extended solely to the original purchaser of the product, is terminated upon any subsequent transfer or sale from or by the original purchaser, and extends no third party benefits or rights whatsoever.

The warranty term for any product used in any for hire, rental fleet or rental application, is limited to six (6) months from the date of delivery of the product to the original purchaser by an authorized H&S dealer.

This warranty does not include: (1) Any product that has been altered or modified in ways not approved by H&S; (2) Depreciation or damage caused by normal wear, use for which the product was not designed, misuse, improper or insufficient maintenance, improper operation, accident or failure to follow the product Operator’s Manual recommendations and product decal recommendations; (3) Normal maintenance parts and service; (4) Repairs made with parts other than those available from H&S or performed by anyone other than H&S or a dealer authorized by H&S to sell and/or service the product involved.

To secure warranty service the purchaser must report the product defect to a dealer authorized by H&S to sell and/or service the product involved within the applicable warranty term together with evidence of the warranty start date and make the product available to that dealer within a reasonable period of time.

For these warranty terms to be in effect the selling authorized H&S dealer and/or the customer must submit the warranty registration to H&S.

THERE ARE NO WARRANTIES WHICH EXTEND BEYOND THE DESCRIPTION ON THE FACE OF THIS WARRANTY. H&S and the companies affiliated with it make no warranties, representations, or promises, express or implied, as to the performance or freedom from defect of its products other than those set forth above and NO IMPLIED WARRANTY OF MERCHANTABILITY, FITNESS OR FITNESS FOR A PARTICULAR PURPOSE IS MADE. IN NO EVENT WILL THE DEALER, H&S OR ANY COMPANY AFFILIATED WITH H&S BE LIABLE FOR INCIDENTAL OR CONSEQUENTIAL DAMAGES. The ONLY REMEDY the purchaser has in connection with the breach of performance of any warranty on H&S products are those set forth above.

The selling dealer has no authority to make any representation or promise on behalf of H&S, or to modify the terms or limitations of this warranty in any way.

12/20/22

MANUFACTURER'S STATEMENT

Your New H&S Product has been manufactured of the finest quality materials and components. The performance you get from your machine is largely dependent upon how well you read and understand this manual and apply this knowledge. There is a right and a wrong way to do everything. Please do not assume that you know how to operate and maintain your Machine before reading this manual carefully. Keep this manual available for ready reference.

H&S reserves the right to make changes or add improvements to its products at any time without incurring any obligation to make such changes to products previously manufactured. Specifications, statements and descriptions of products contained in this publication are subject to change without prior notification.

WARRANTY REGISTRATION

(Remove Copy At Perforation)

- **Date of Purchase:** _____
- **Purchaser Name:** _____
- **Street Address:** _____
- **City:** _____
- **State:** _____ **Zip:** _____
- **Phone Number:** _____

  E-mail Address: _____
- **Product:** _____
- **Model Number:** _____
- **Serial Number:** _____
- **You have received the Operators Manual for this product. Yes _____ No _____**

Interested in receiving the H&S Newsletter? Yes _____ No _____

- **Dealer Name:** _____
- **Street Address:** _____
- **City:** _____
- **State:** _____ **Zip:** _____
- **Signature:** _____
- ***All fields must be filled out to insure prompt notification of product and/or warranty updates.***

Please mail the completed WARRANTY REGISTRATION FORM to:
H&S Manufacturing Co., Inc.
2608 S. Hume Ave.
Marshfield, WI 54449

Intentionally Left Blank

DEALER PRE-DELIVERY CHECKLIST

AFTER COMPLETION, DEALER SHOULD REMOVE AND RETAIN FOR RECORDS

After the ***manure spreader*** has been completely set up, check to be certain it is in correct operating order before delivering to the customer. The following is a list of points to inspect. Check off each item as you have made the proper adjustments and found the item operating satisfactorily.

- ❑ ***Manure spreader*** was not damaged in shipment. Check for dents and loose or missing parts. Report damage immediately to H&S Manufacturing Co., Inc.
- ❑ All bolts and fasteners are tight.
- ❑ ***Manure spreader*** has been correctly assembled according to instructions in this manual.
- ❑ All grease fittings have been lubricated. Gearbox is filled to proper level if applicable.
- ❑ Guards and shields are secure.
- ❑ Wheels are properly mounted to torque specifications.
- ❑ Tires are inflated to correct pressure.
- ❑ Drive chain tension and alignment is correct.
- ❑ Decals are in place and legible.
- ❑ Main apron chains are adjusted properly.
- ❑ Main apron operates smoothly.
- ❑ Implement and all components are functioning properly.

(Remove Dealer File Copy At Perforation)

Model Number _____ Serial # _____

Dealer's Name _____

Inspection Date _____

Signature of Pre-Delivery Inspector _____

Intentionally Left Blank

DEALER DELIVERY CHECKLIST

AFTER COMPLETION, DEALER SHOULD REMOVE AND RETAIN FOR RECORDS

This checklist that follows is an important reminder of valuable information that should be passed on to the customer at the time this manure spreader is delivered.

Check off each item as you explain it to the customer.

This delivery checklist, when properly filled out and signed, assures the customer that the pre-delivery service was satisfactorily performed.

- ❑ Explain to the customer that the pre-delivery inspection was made.
- ❑ Explain to the customer all the safety precautions they must exercise when operating this unit.
- ❑ Explain recommended loads for different types of materials.
- ❑ Explain to customer that regular lubrication is required for proper operation and long life of machine.
- ❑ Show customer the lubrication section of Owner's Manual.
- ❑ Give the customer Owner's Manual and make sure they read and understand all operating and service instructions.
- ❑ Have the customer sign a completed "Warranty Registration" and mail it.

(Remove Dealer File Copy At Perforation)

Date Delivered _____

Dealer's Name _____

By _____

Signature of Original Buyer _____

Note: Warranty is not valid until warranty card is completed and returned to H&S Mfg. Co., Inc.

Intentionally Left Blank

SAFETY INFORMATION

BE ALERT!

YOUR SAFETY IS INVOLVED.

THIS SYMBOL IS USED THROUGHOUT THIS BOOK WHENEVER YOUR PERSONAL SAFETY IS INVOLVED. TAKE TIME TO BE CAREFUL. REMEMBER: THE CAREFUL OPERATOR IS THE BEST OPERATOR. MOST ACCIDENTS ARE CAUSED BY HUMAN ERROR. CERTAIN PRECAUTIONS MUST BE OBSERVED TO PREVENT THE POSSIBILITY OF INJURY OR DAMAGE.

H&S MANUFACTURING CO., INC.

SAFETY INFORMATION

Keep signs in good condition. Immediately replace any missing or damaged signs.

RECOGNIZE SAFETY INFORMATION

This is the safety alert symbol. When you see this symbol on your machine or in this manual, be alert to the potential for personal injury. Follow recommended precautions and safe operating practices.

UNDERSTAND SIGNAL WORDS

A signal word - DANGER, WARNING, or CAUTION - is used with the safety alert symbol. DANGER identifies the most serious hazards.

Safety signs with signal word DANGER or WARNING are typically near specific hazards.

General precautions are listed on CAUTION safety signs.

FOLLOW SAFETY INSTRUCTIONS

Carefully read all safety messages in this manual and all safety signs on your machine. Follow all recommended precautions and safe operating procedures.

Keep signs in good condition. Immediately replace any missing or damaged signs.

OBSERVE MAXIMUM TRANSPORT SPEED

The maximum transport speed for this implement is 32 km/h (20 mph).

Some tractors are capable of operating at speeds that exceed the maximum transport speed of this implement. Regardless of the maximum speed capability of the tractor being used to tow this implement, do not exceed the implement's maximum transport speed.

Exceeding the implement's maximum transport speed can result in:

* Loss of control of the tractor/implement combination
* Reduced or no ability to stop during braking
* Implement tire failure
* Damage to the implement structure or its components

Use additional caution and reduce speed when towing under adverse surface conditions, when turning, and when on inclines.

Do not attempt transport if the fully loaded implement weighs more than 1.5 times the weight of the tractor.

SAFETY INFORMATION

TRACTOR:
This operator's manual uses the term "Tractor" when identifying the power or the towing source.

TO PREVENT SERIOUS INJURY OR DEATH

BEFORE YOU ATTEMPT TO OPERATE THIS EQUIPMENT, READ AND STUDY THE FOLLOWING INFORMATION. IN ADDITION, MAKE SURE THAT EVERY INDIVIDUAL WHO OPERATES OR WORKS WITH THIS EQUIPMENT, WHETHER FAMILY MEMBER OR EMPLOYEE, IS FAMILIAR WITH THESE SAFETY PRECAUTIONS.

KNOW HOW TO STOP UNLOADING MECHANISM BEFORE STARTING IT.

If the machine becomes clogged, Stop the tractor engine, remove ignition key, and allow all mechanisms to stop before cleaning or working on the machine.

DO NOT get off the tractor while the spreader is in operation.

DO NOT attempt to perform maintenance or repair with tractor running.

DO NOT step up on machine at any time. **NEVER** manually feed material into the beaters.

DO NOT allow minors to operate or be near the machine.

DO NOT ALLOW PERSONNEL OTHER THAN THE QUALIFIED OPERATOR NEAR THE MACHINE.

DO NOT clean, adjust, or lubricate the machine when any part is in operation.

Keep hands, feet, and clothing away from beaters when they are revolving.

Loose or floppy clothing should not be worn by the operator.

Be sure the machine is clear of people, tools, and other objects before engaging the apron & beater.

NEVER start manure spreader until all guards and safety shields are secured in place.

H&S MFG. CO. INC. always takes the operator and their safety into consideration and guards expose moving parts for their protection. However, some areas cannot be guarded or shielded in order to ensure proper operation. In addition, the operator's manual and decals on the machine itself warn you of further danger and should be read and observed closely.

Study The Above Safety Rules
ATTENTION - BE ALERT - YOUR SAFETY IS INVOLVED

CAP SCREW TORQUE VALUES

The specifications below are the torque values for fasteners as it adheres to the SAE torque value standards. All fasteners should be torqued to the proper values found in the figures below unless otherwise specified by the engineering drawing.

- Lubed torque would be any fastener that has grease, liquid Loctite, oil, etc. on the threads.
- Dry torque would be any fastener which has threads that are clean and dry and do not have any liquid Loctite or grease on them.

Hex Head Fasteners

The figure shown below shows how to determine what SAE grade a fastener is.

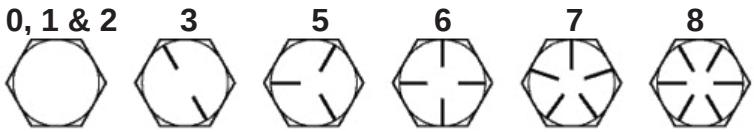

	SUGGESTED ASSEMBLY TORQUE VALUES						WORKING TORQUE			
	SAE GR. 2-6”		SAE GR. 5		SAE GR. 8		18-8 SS	316 SS	Brass	Silicon Bronze
Dia. & Thrds. per inch	Dry Ft. Lbs.	Lube Ft. Lbs.	Dry Ft. Lbs.	Lube Ft. Lbs.	Dry Ft. Lbs.	Lube Ft. Lbs.	Inch Lbs.	Inch Lbs.	Inch Lbs.	Inch Lbs.
1/4-20	5.5	4.2	8	6.3	12	9	75.2	78.8	61.5	68.6
1/4-28	6.3	4.7	10	7.2	14	10	94.0	99.0	77.0	87.0
5/16-20	11	8	17	13	24	18	132	138	107	123
5/16-28	12	9	19	14	27	20	142	147	116	131
3/8-16	20	15	30	23	45	35	236	247	192	219
3/8-24	23	17	35	25	50	35	259	271	212	240
7/16-14	32	24	50	35	70	50	376	393	317	349
7/16-20	36	27	55	40	80	60	400	418	327	371
1/2-13	50	35	75	55	110	80	517	542	422	480
1/2-20	55	40	85	65	120	90	541	565	443	502
9/16-12	70	55	110	80	150	110	682	713	558	632
9/16-18	80	60	120	90	170	130	752	787	615	697
5/8-11	100	75	150	110	210	160	1110	1160	907	1030
5/8-18	110	85	170	130	240	180	1244	1301	1016	1154
3/4-10	175	130	260	200	380	280	1530	1582	1249	1416
3/4-16	200	140	300	220	420	310	1490	1558	1220	1382
7/8-9	170	125	430	320	600	450	2328	2430	1905	2140
7/8-14	180	140	470	350	670	500	2318	2420	1895	2130
1-8	250	190	640	480	910	680	3440	3595	2815	3185
1-14	280	210	720	540	1020	760	3110	3250	2545	2885

TRANSPORTING

When transporting on the highway, regularly cleant the rear of the spreader. There is a holder provided for your SMV sign.

PREPARING FOR OPERATION

1. Check for proper assembly and adjustment and make sure that all bolts are tightened. Securely retighten after a few hours of operation as bolts can loosen up on new machinery. Check wheel bolts upon delivery and periodically thereafter. Wheel bolts should be tightened at 85-95 ft./lbs. of torque.
2. Check the tires and inflate to the recommended pressure of 14 PSI.
3. Attach the spreader to the tractor as described in the following sections.
4. Before operation pull slowly to make sure that the spreader is operating and lubricated properly.

ATTACHING TO THE TRACTOR

Fasten the spreader hitch to the drawbar with a **hitch pin with a safety locking device.** Use 1/2" diameter hitch pin to pull spreader.

OPERATION

LOADING

In freezing weather, make sure the apron is not frozen to the floor. Also check to make sure that there are no chunks of manure frozen to the floor. Begin loading the spreader at the front end and work toward the rear until loading is completed. Loading this way permits the materials to be spread uniformly. Loading front to rear is particularly important. Do not load up to beater; leave approximately 6-12" in front of beater. When hauling extremely heavy material, it may be necessary to reduce the load size. Never load material onto the beater. Do not use extra sideboards. Do not overload spreader. Overloading decreases spreading effectiveness. Do not load above the beater.

HOW TO ENGAGE SPREADER

Make sure the tractor is shut off and all motion has stopped. To engage the beater, ensure beater drive chain is properly seated on the wheel hub sprocket. Pull the beater lever on the right- hand side of the spreader forward. This will release the latch. Allow the lever to travel rearward to engage the beater. To engage the apron, pull the apron lever on the left-hand side of the spreader forward. This will release the latch. Allow the lever to travel rearward to engage the apron. When forward motion begins, the spreader will operate. See illustration on next page.

SPREADING

1. **DO NOT back up with beater or apron engaged or damage to drives may occur.**
2. Operating above 4 mph will damage the manure spreader and not be covered under warranty.
3. Only operate spreader with the beater and apron both engaged until spreader is almost empty.
4. Beater may be disengaged when spreader is almost empty to speed up clean-out time.

SERVICE

Be certain to shut off tractor and disengage the apron and beater drives before servicing. Keep loose clothing away from all chain and gear drives as well as the other moving parts. Keep off of the equipment when in use, and keep all safety shields in place. Do not attempt to clean, grease or lubricate while the machine is running. **NEVER** allow riders in or on the machine.

ADJUSTMENTS

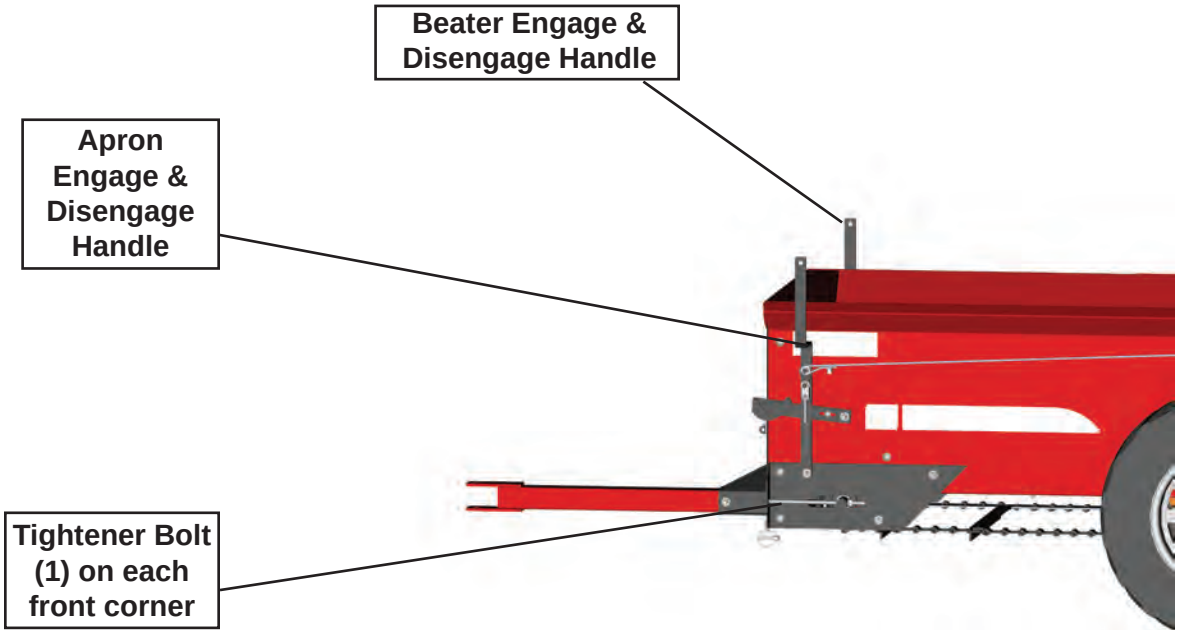

APRON

Adjust the apron by tightening the adjusting bolts located at the front of the spreader until the apron chain rests lightly on top of the chain guides located below the axle.

NOTE: Tighten the adjusting bolts on each front corner equally so that the apron slats run parallel with the ends of the bed. The apron will be damaged if the machine is operated with one end of the apron slats running ahead of the opposite end. Do not tighten the apron chain excessively.

APRON DRIVE RATCHET

Ratchet should be set to take two teeth while under normal operation. If adjustment is needed, loosen two bolts (A) securing holding dog bracket. Adjust bracket in slotted holes. Retighten bolts when proper adjustment is reached.

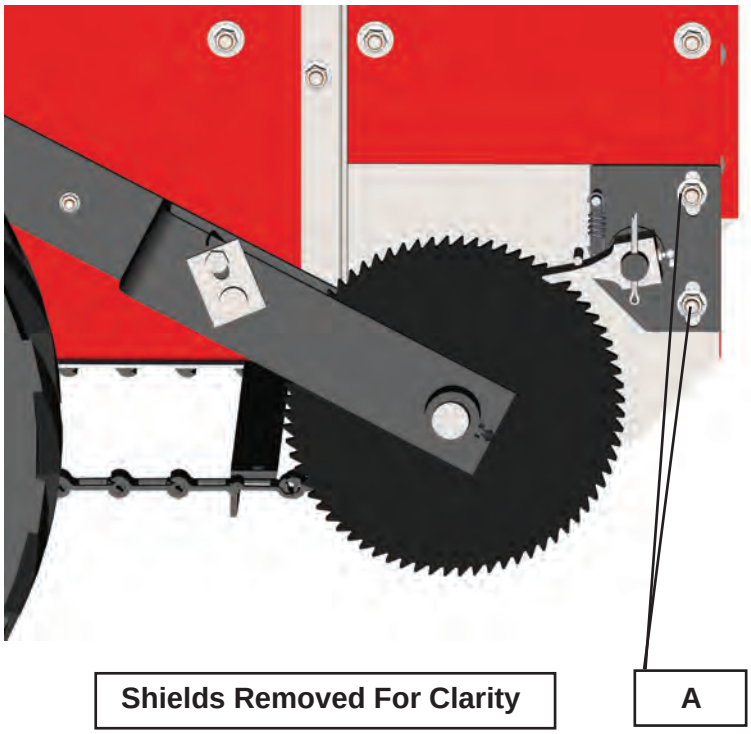

ADJUSTMENTS

BEATER DRIVE CHAIN

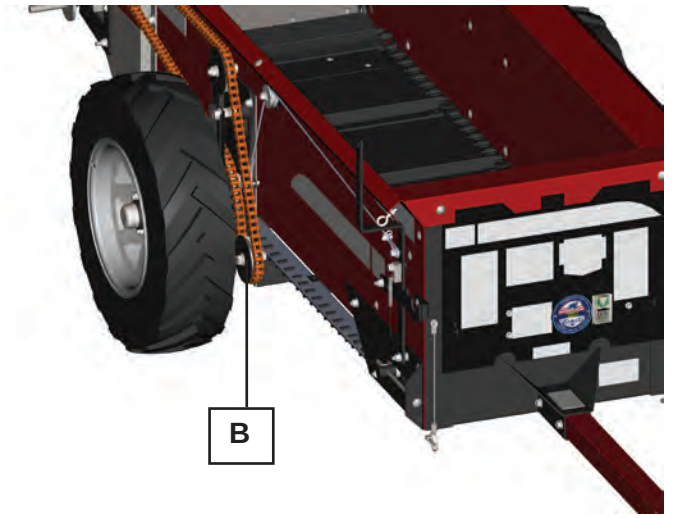

Direction of Travel

Tightening of the chain may be done by loosening the idler sprocket bolt (B) and sliding slider sprocket assembly towards the front of the spreader. Then, retighten the idler sprocket bolt. Overtightening of the beater chain drive will cause engagement misalignment.

BEATER

The beater paddles are welded to the beater shaft. Replacement of these paddles should be performed by an authorized service person who is a competent welder. When replacing paddles, the sharp edge of the teeth must lead in the direction of beater travel.

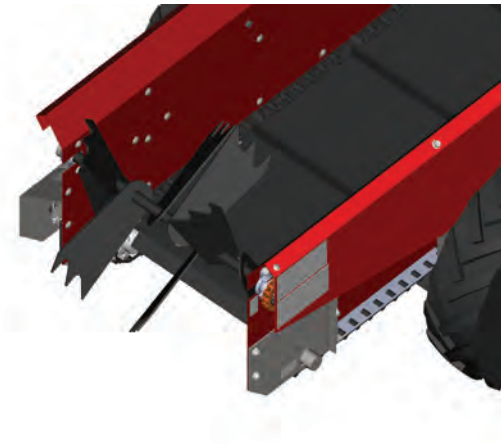

ADJUSTING WHEEL BEARINGS

To adjust the wheel hubs, tighten the castellated nut on the spindle to the point where there is no end-play and a slight drag on the bearings, then replace the cotter key with a new one of the correct size.

FAILURE TO FOLLOW THE RECOMMENDED ADJUSTMENTS WILL VOID WARRANTY.

OPTIONS

REAR PAN

The rear pan shown below on the S1225 is optional equipment.

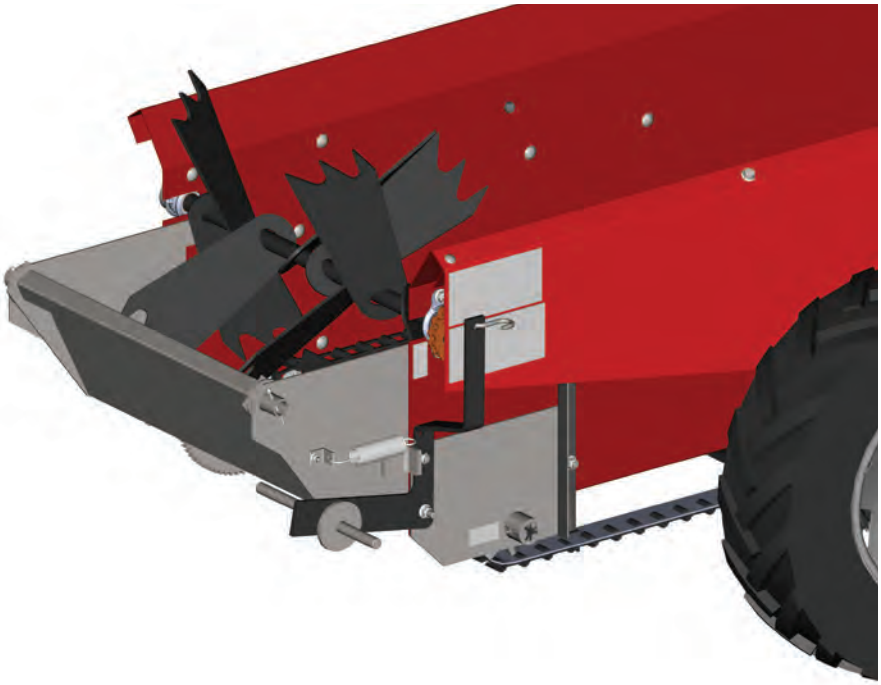

LUBRICATION GUIDE

The operator should become familiar with all lubrication points and establish a systematic routine to ensure complete and quick lubrication of the machine.

DRIVE CHAIN

Lubricate the drive chain with a light machine oil. Keep chains aligned with sprockets. This will lengthen the life of the sprockets and chain. Lubricate chains often.

GREASE FITTINGS

There are 9 grease fittings on this spreader. Lubricating properly and often will prolong the life of the spreader. Grease every 20 hours, also **before storage and after power washing.** Make certain that the grease fittings are free of paint and dirt. Force a high-quailty grease into them until the grease comes out around the shaft on the sleeve-type bearings. Wipe off grease to prevent the accumulation of chaff and grit around the bearings.

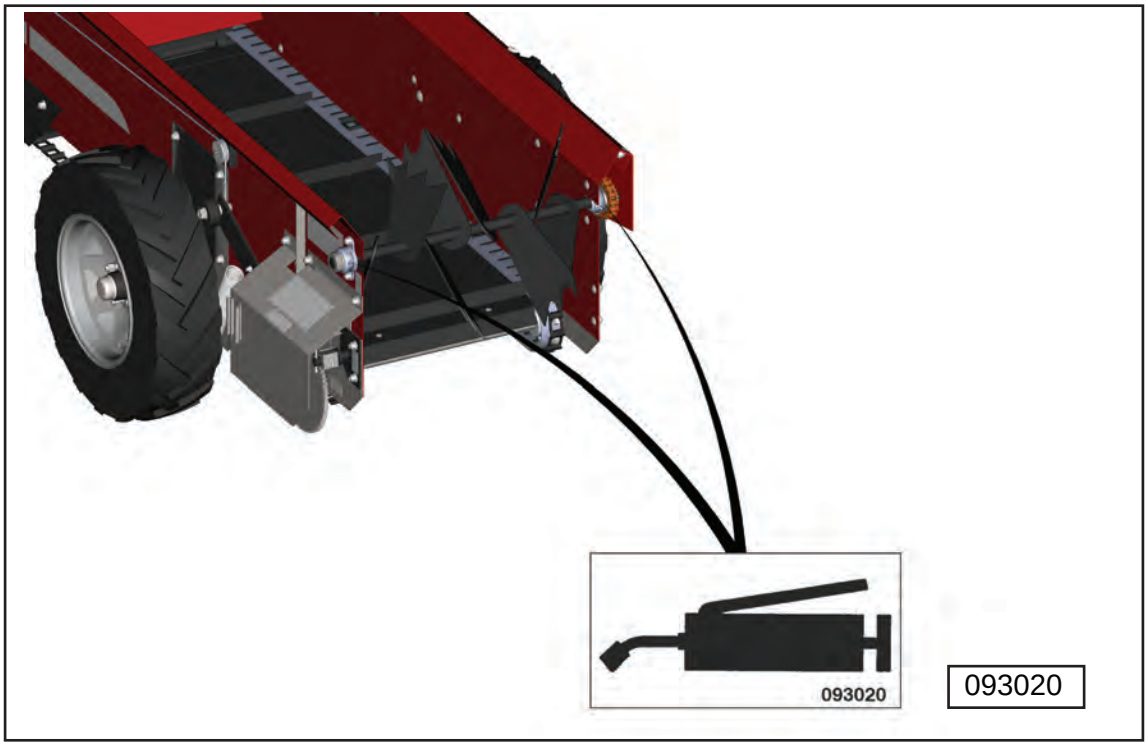

LUBRICATION GUIDE

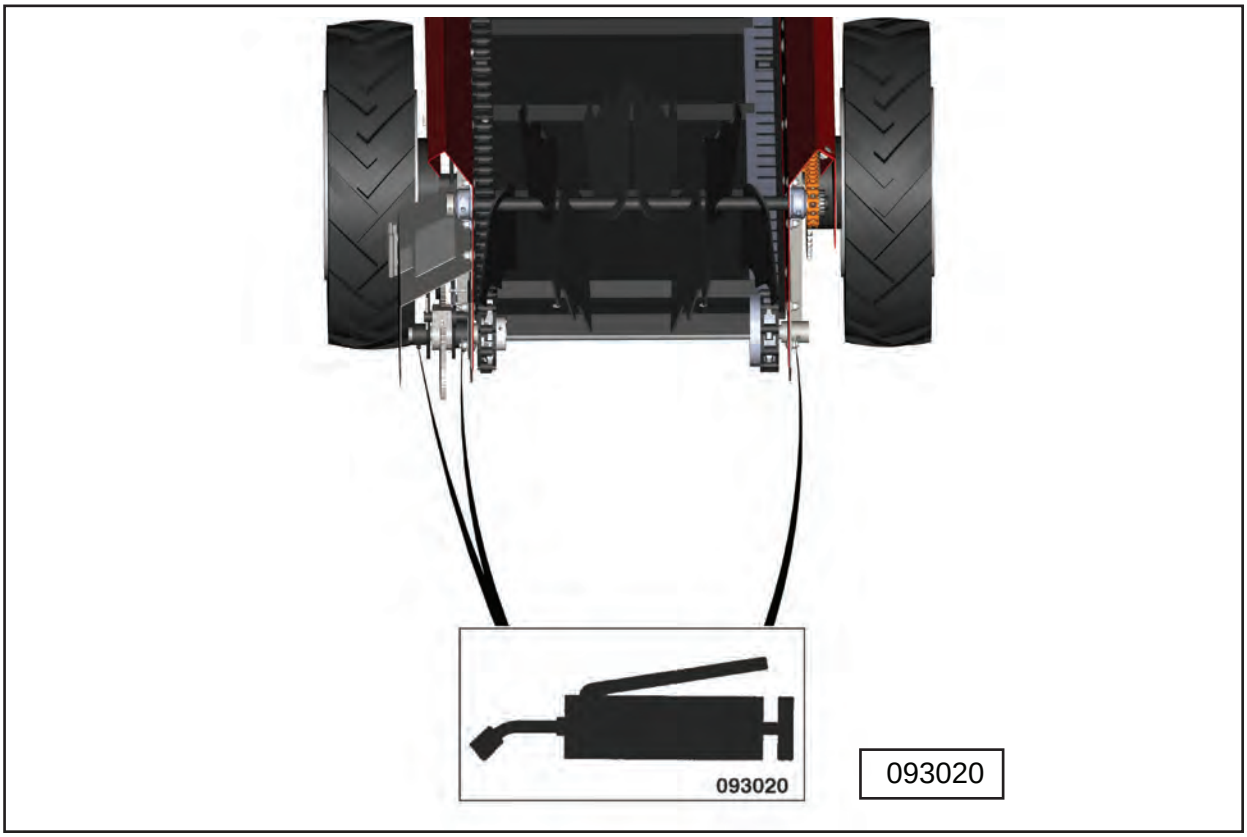

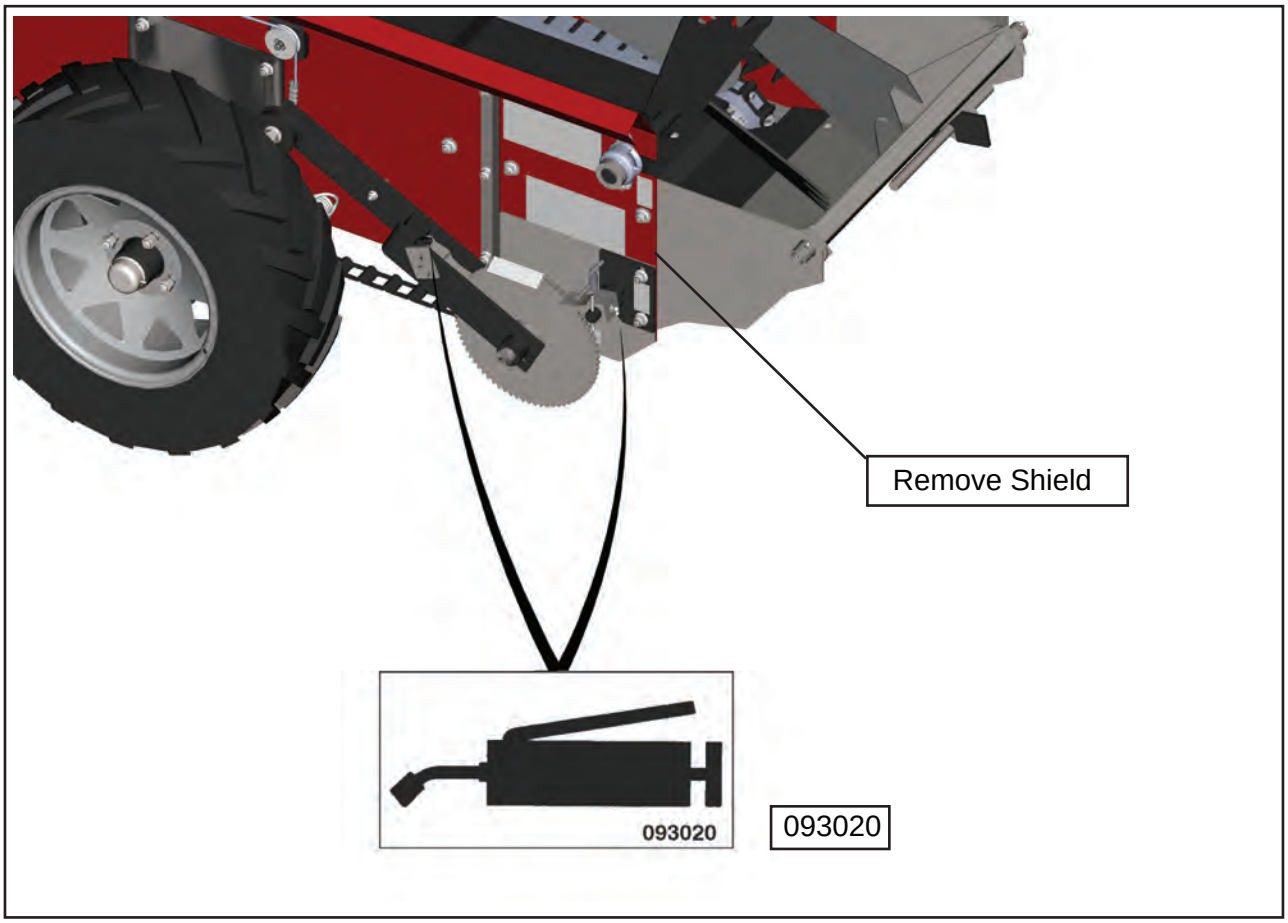

LUBRICATION GUIDE

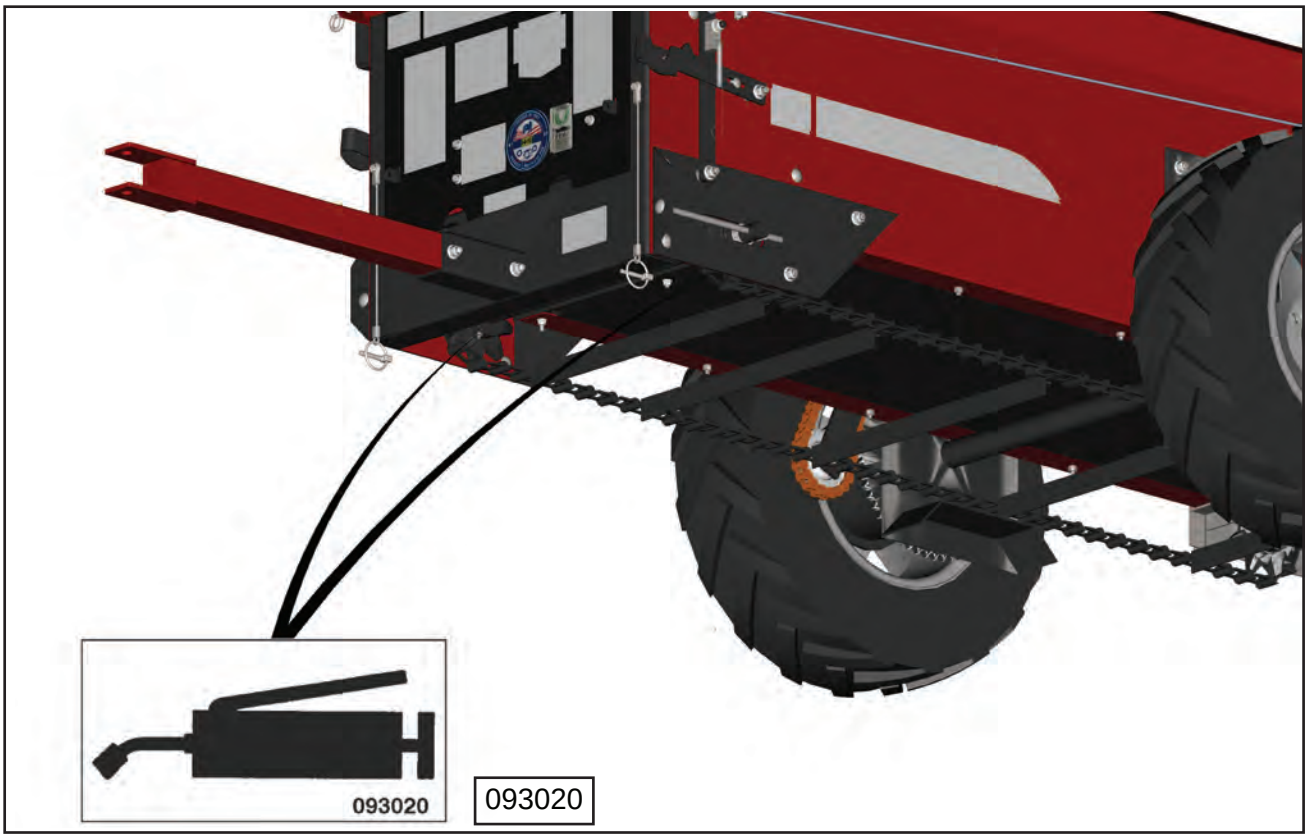

DECAL LOCATION

Your manure spreader was manufactured with operator safety in mind. Located on the manure spreader are various decals to aid in operation and warn of danger or caution areas. Pay close attention to all the decals on your Manure Spreader.

DO NOT REMOVE ANY OF THESE DECALS. IF DECALS ARE LOST, DAMAGED, OR IF MANURE SPREADER IS REPAINTED, REPLACE DECALS.
REMEMBER: DECALS ARE FOR YOUR PROTECTION AND SAFETY.

PART #	QTY	DESCRIPTION
311	1	Patent Numbers
1494A	2	Warning - Do Not Operate
1494B	2	Warning - Do Not Remove Shields
1494K	2	Warning - Do Not Remove Shields
91599	1	Model Number Decal Left Side
91602	1	Branding Decal Left Side
94321	1	Model Number Decal Right Side
91603	1	Branding Decal Right Side
91605	1	Model Decal Front
91606	1	Branding Decal Front
9194B	1	Danger - Never Allow Riders
52703E	1	Beater Engage/Disengage
52703F	1	Apron Engage/Disengage
54033	1	3” U.S.A.
66076	2	Located Behind Shield
72203A	1	Warning - Help Avoid Injury
84045	1	H&S Since 1967
82697A	2	Danger Stay Clear
093020	9	Grease
1064176	1	Caution - No Step
84044	1	Decal, FEMA
DCSERIAL	1	Deca, Serial Number

SAFETY LOCATION

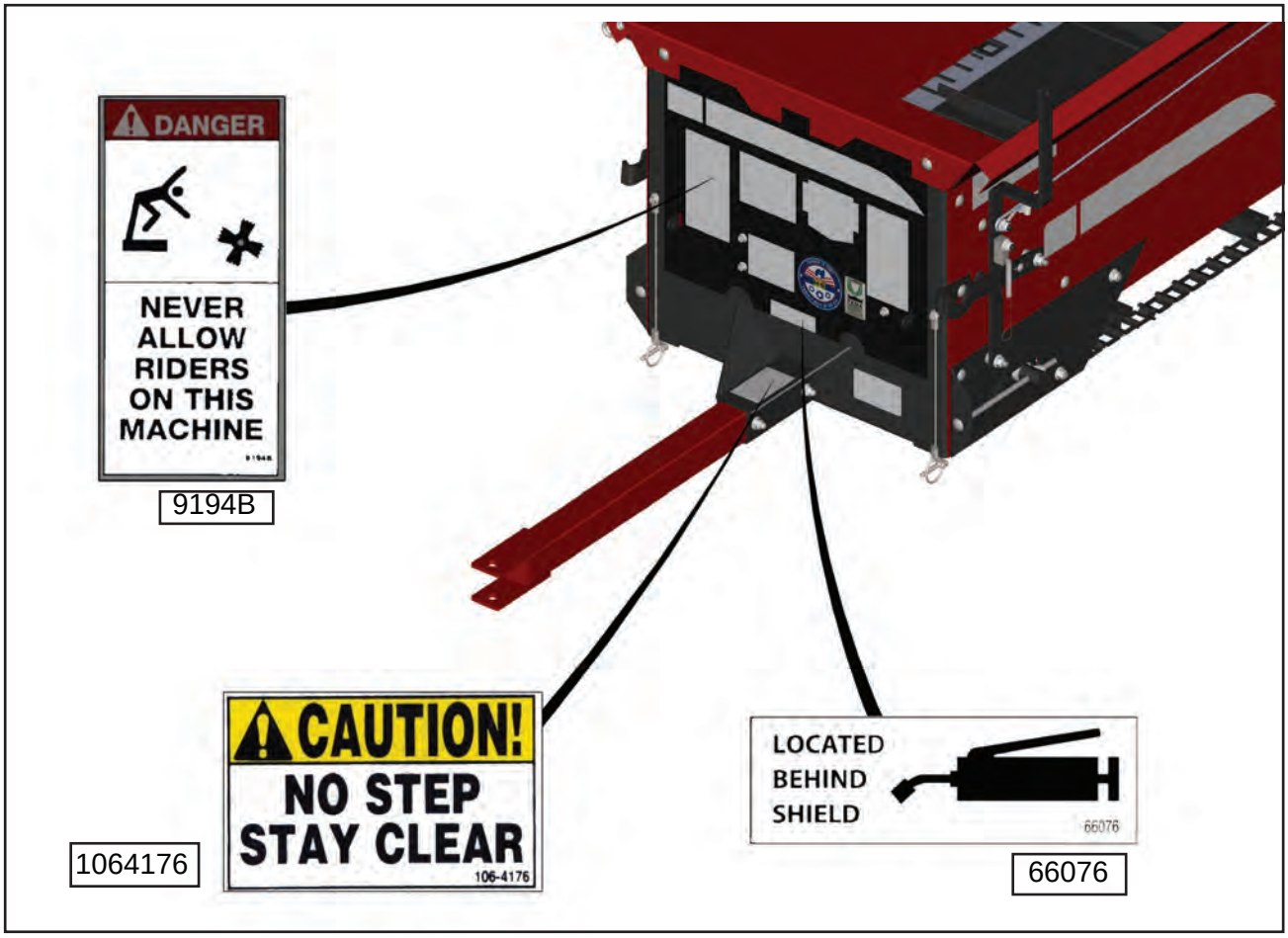

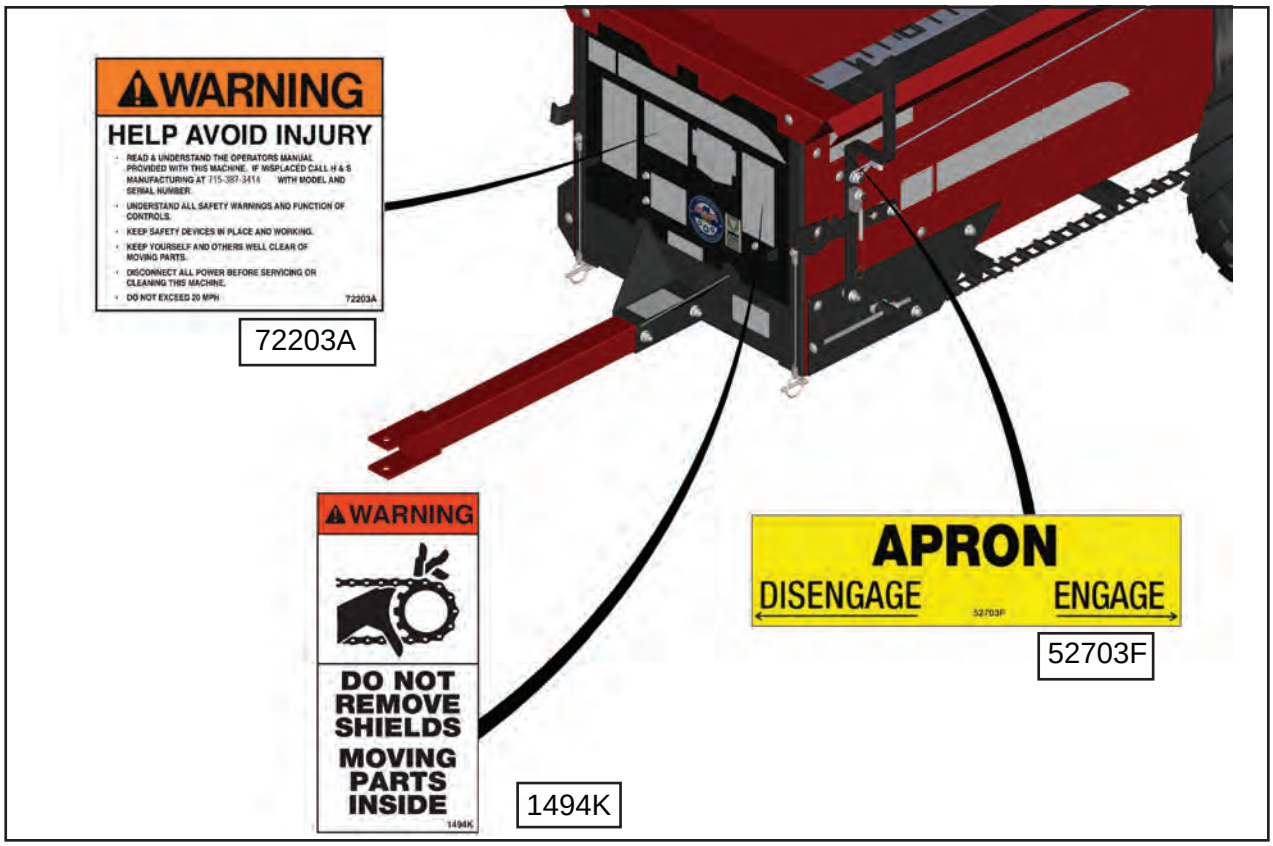

SAFETY LOCATION

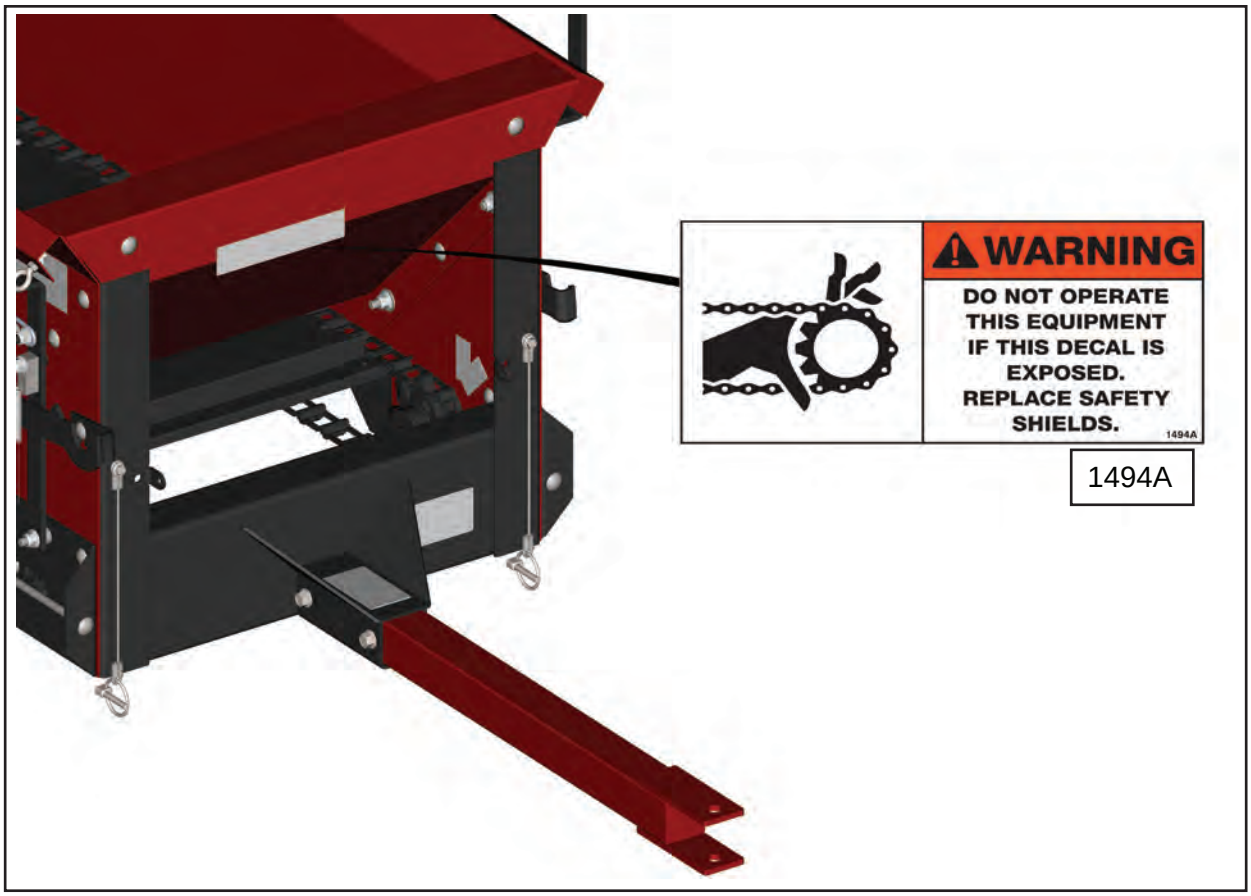

SAFETY LOCATION

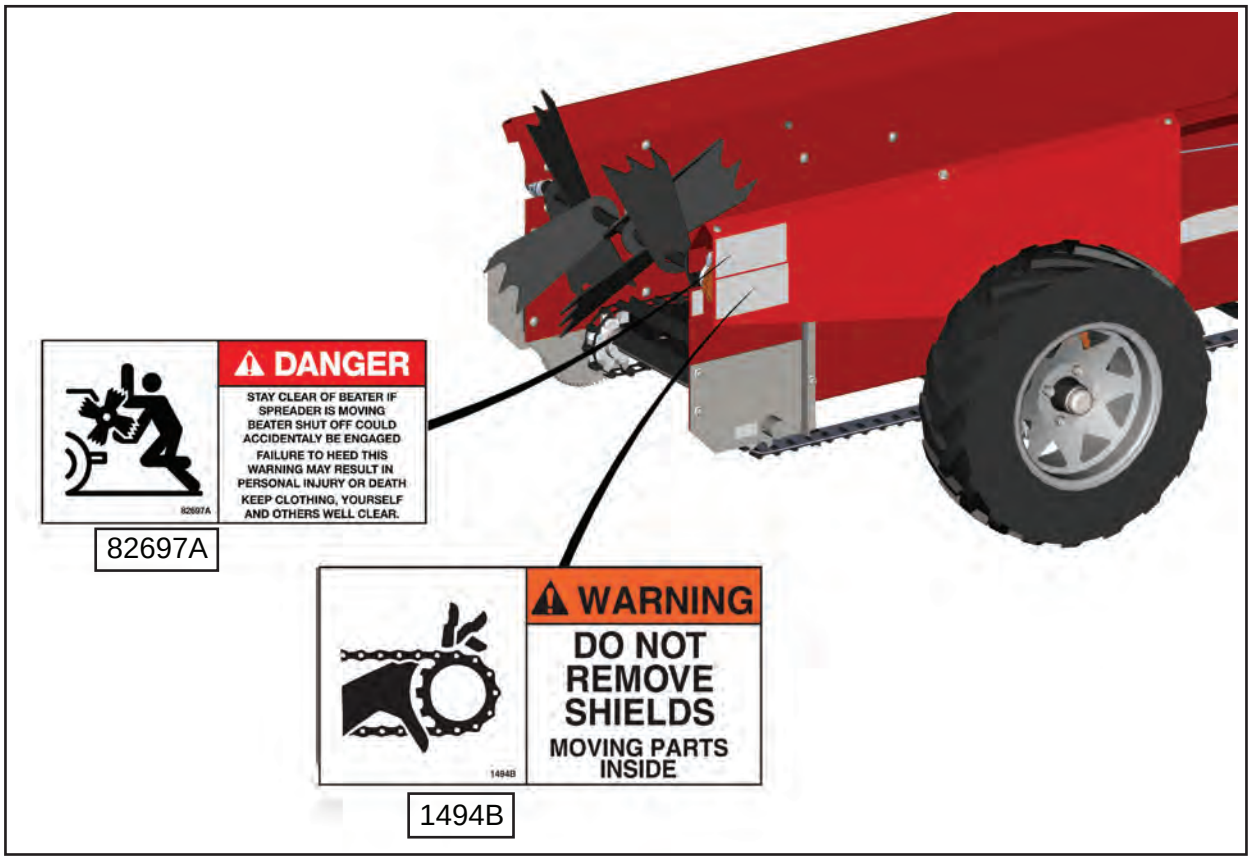

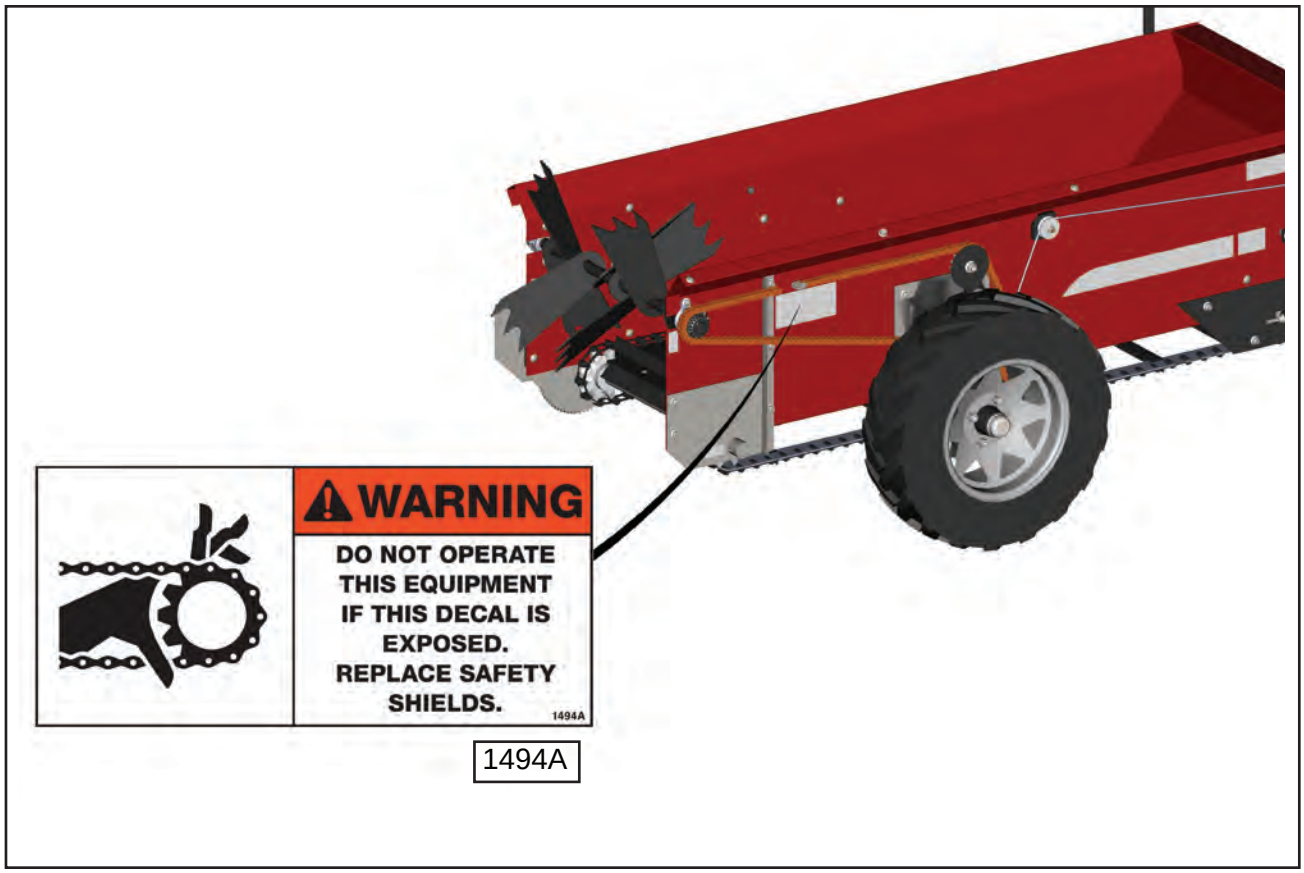

SAFETY LOCATION

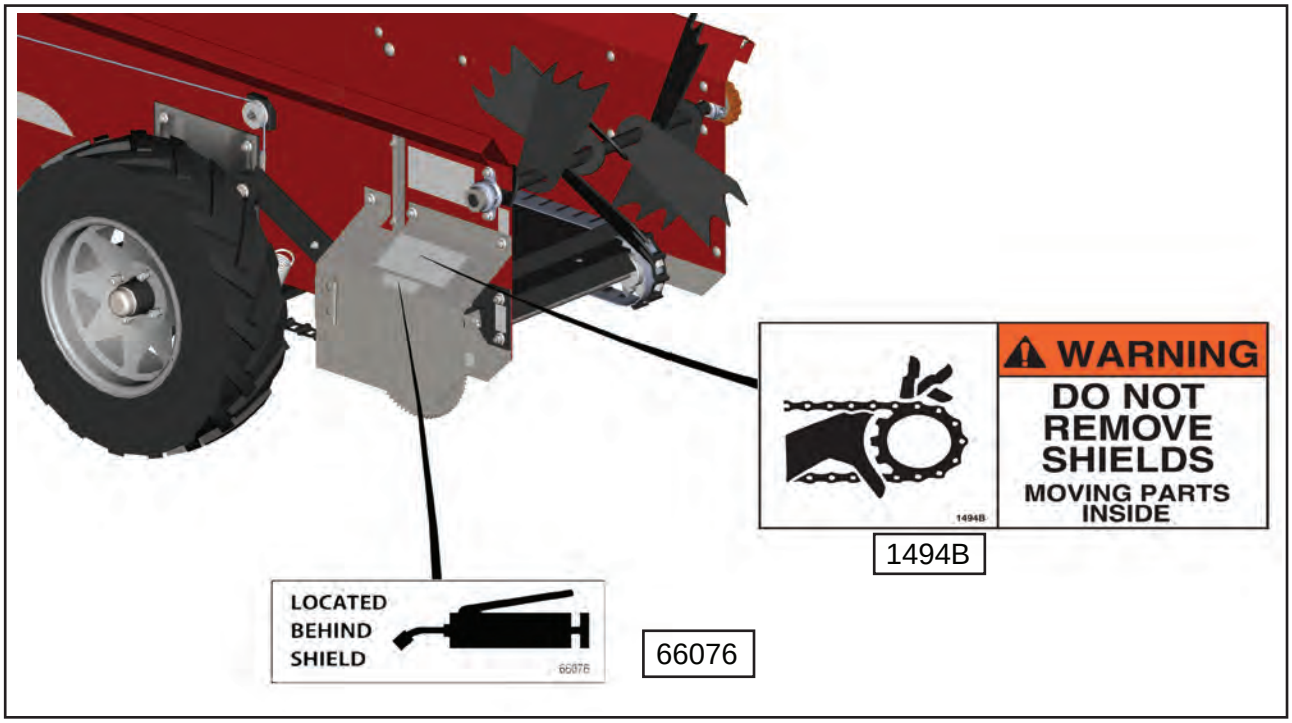

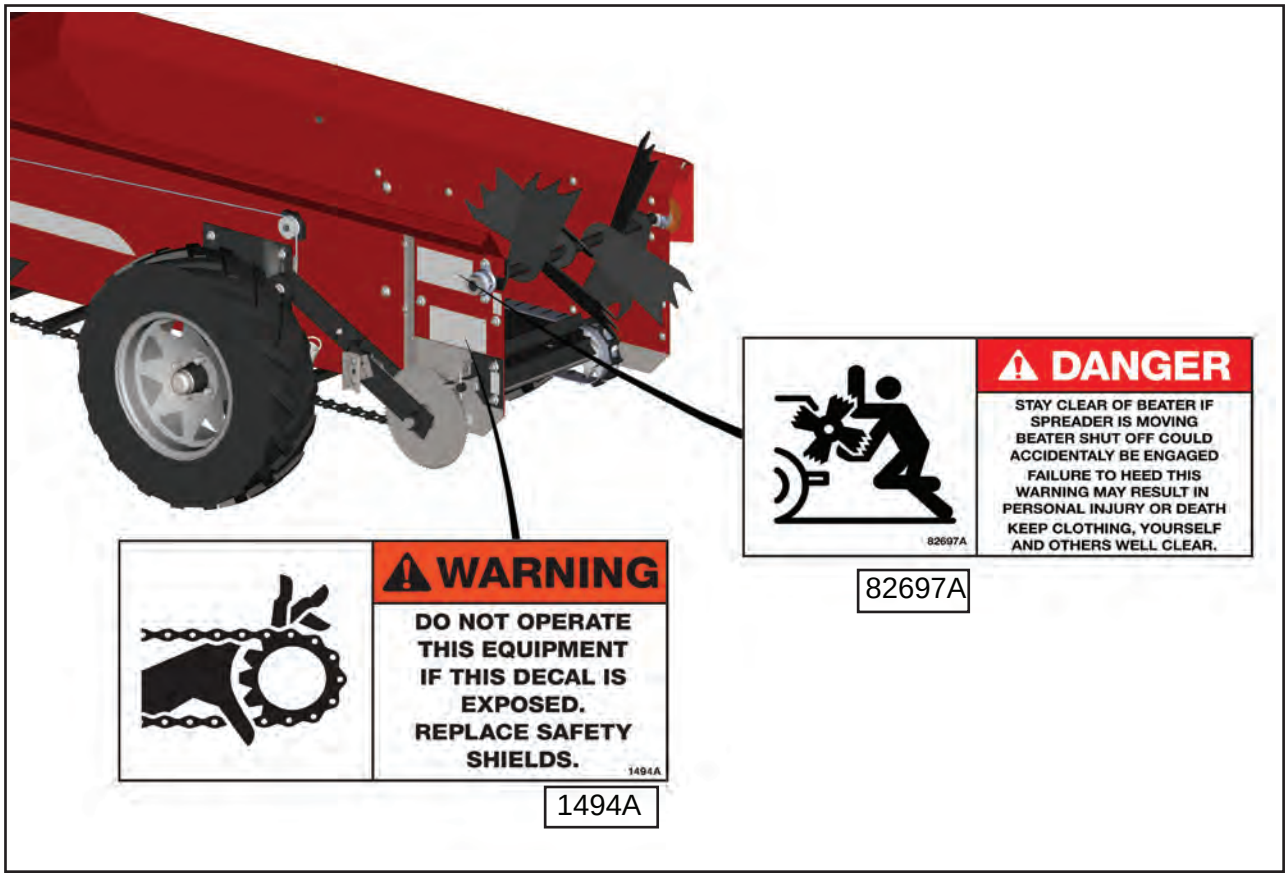

SAFETY LOCATION

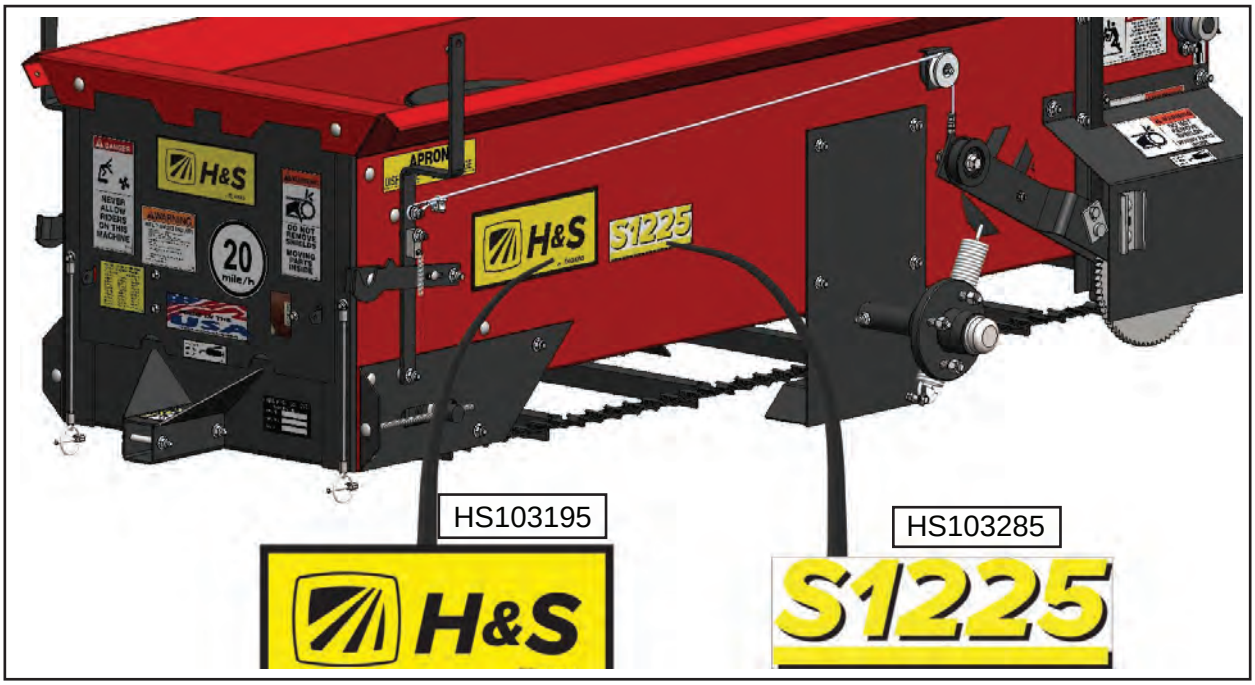

SAFETY LOCATION

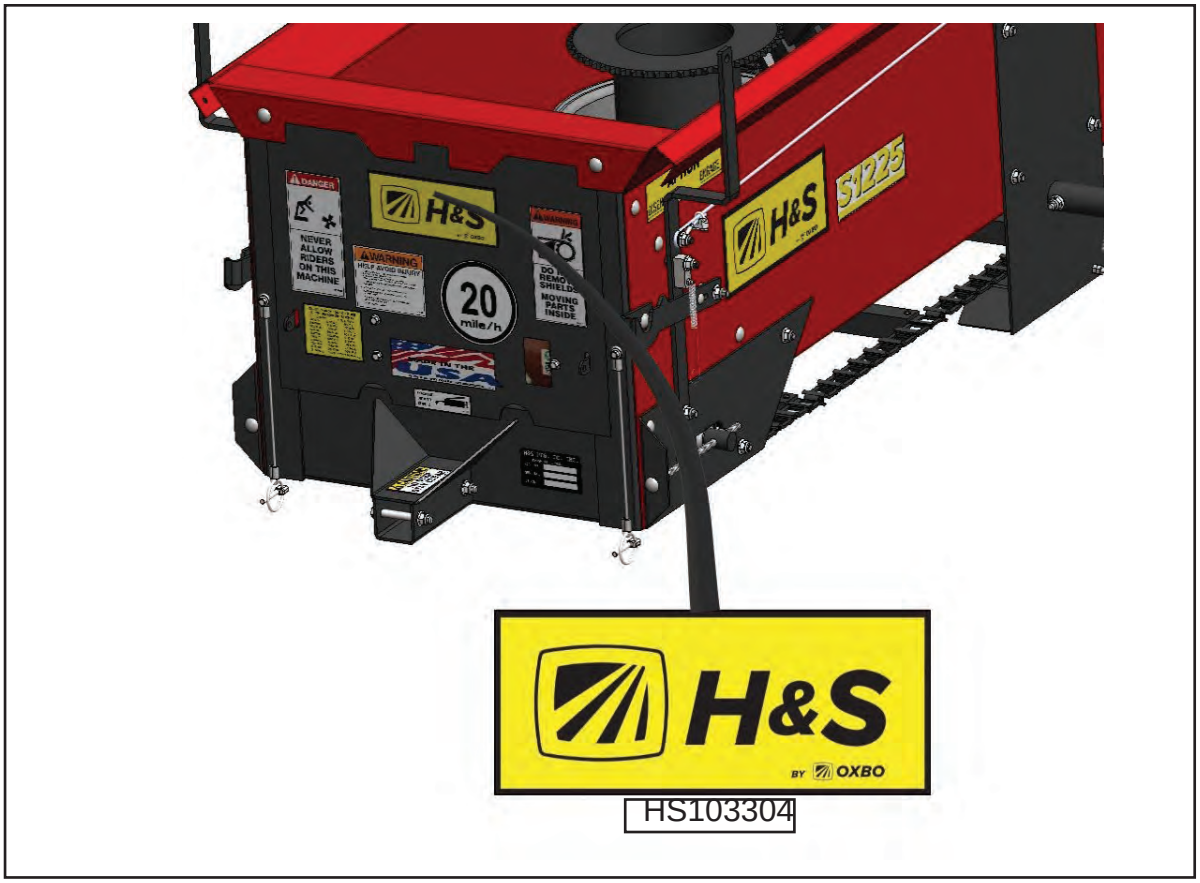

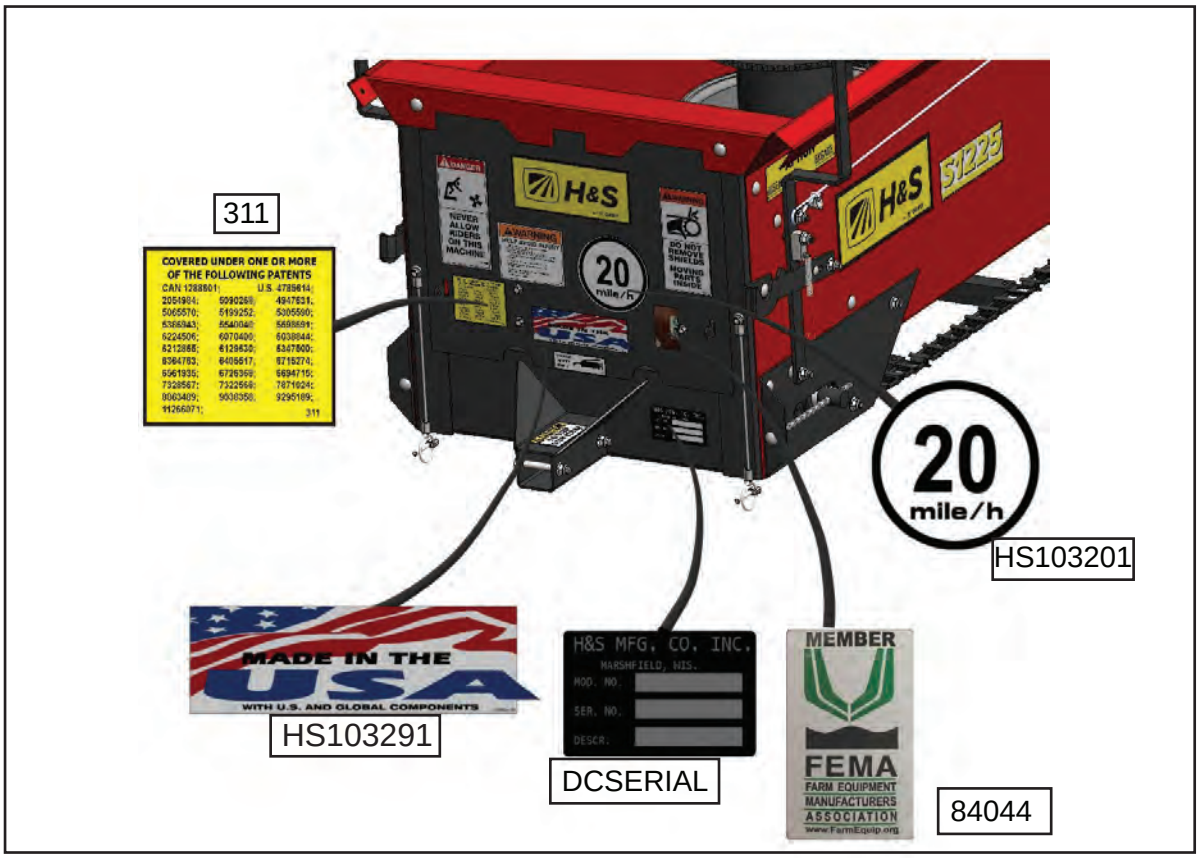

TROUBLESHOOTING

WARNING:
MAKE SURE THAT THE TRACTOR IS SHUT OFF AND SPREADER CANNOT MOVE BEFORE SERVICING THE MANURE SPREADER. MAINTENANCE AND REPAIR SERVICE WORK TO BE PERFORMED BY A QUALIFIED SERVICE PERSON ONLY.

TROUBLE...	POSSIBLE CAUSE...	POSSIBLE REMEDY...
BEATER DOES NOT TURN	BEATER NOT ENGAGED	ENGAGE BEATER
	DRIVE CHAIN RUN OFF OR BROKEN	CHECK DRIVE CHAIN FOR BENT OR BROKEN LINKS
	BEATER SPROCKET KEY SHEARED OR MISSING	REPLACE KEY
	BEATER SHAFT BROKEN	CHECK SHAFT REPLACE IF NEEDED
	NO FORWARD MOTION TO DRIVE SPREADER	DRIVE FORWARD
APRON DOES NOT TURN	APRON NOT ENGAGED	ENGAGE APRON
	CAM ROLLER NOT CONTACTING CAM OR MISSING	CHECK ALIGNMENT OR REPLACE IF MISSING
	RATCHET DOGS OUT OF ADJUSTMENT	MAKE PROPER ADJUSTMENT
	DOGS NOT CONTACTING RATCHET	REPLACE MISSING OR BROKEN DOGS
	DOG SPRINGS MISSING OR BROKEN	REPLACE MISSING OR BROKEN SPRINGS
	KEYS ON MAIN SHAFT SHEARED OR MISSING	REPLACE SHEARED OR MISSING KEYS
	NO FORWARD MOTION TO DRIVE SPREADER	DRIVE FORWARD
BEATER DOES NOT DISENGAGE	CABLE OUT OF ADJUSTMENT OR BROKEN	ADJUST CABLE OR REPLACE IF BROKEN
APRON DOES NOT DISENGAGE	CABLE OUT OF ADJUSTMENT OR BROKEN	ADJUST CABLE OR REPLACE IF BROKEN
WHEELS WILL NOT TURN	SPREADER OVER LOADED	UNLOAD TO MANUFACTURER SPECIFICATIONS
	MATERIAL WEDGED IN BEATER	REMOVE WEDGED MATERIAL
	TRACTION TIRES INSTALLED INCORRECT DIRECTION	INSTALL CORRECTLY

SERVICE NOTES

SERVICE NOTES

H&S MFG. CO.

products approved

for the

FEMA

SEAL OF QUALITY

Manufactured by:
H&S MANUFACTURING CO., INC.
2608 S. HUME AVE. MARSHFIELD, WI 54449
(715) 387-3414 | hsmfgco.com