4112 & 4114
HI-CAPACITY RAKE

PARTS BOOK

Revision #03
12 Wheel HI CAP. Starting Serial #515865
14 Wheel HI CAP. Starting Serial #515862 HSMFG0814 Part #59784

Manufactured By
H&S MANUFACTURING CO.,INC.
P.O. BOX 768 (715) 387-3414 FAX (715) 384-5463
MARSHFIELD, WISCONSIN 54449

CONTENTS

Instructions for Ordering Parts 1
Figure 1 - 12 Wheel Main Frame Rear 2-3
Figure 2 - 12 Wheel Main Frame Pole & Linkage 4-5
Figure 3 - 12 Wheel Rake Beams & Arms 6-9
Figure 4 - 12 & 14 Gauge Wheel 10-11
Figure 5 - 12 Wheel Hydraulics 12-13
Figure 6 - 12 Wheel Hydraulic Lift Cylinder 14
Figure 7 - 12 & 14 Wheel Hydraulic Opening Cylinder 15
Figure 8 - 14 Wheel Main Frame Rear 16-17
Figure 9 - 14 Wheel Main Frame Pole & Linkage 18-19
Figure 10 - 14 Wheel Rake Beams & Arms 20-23
Figure 11 - 14 Wheel Hydraulics 24-25
Figure 12 - 14 Wheel Hydraulic Lift Cylinder 26-27
Figure 13 - Optional 15” Gauge Wheel 28-29
Figure 14 - 14 to 16 Wheel Expansion Kit 30-31
Figure 15 - Optional 2 Wheel Center Kicker 32-33
Figure 16 - Optional 3 Wheel Center Kicker 34-35
Figure 17 - Optional Lights 36
Figure 18 - Optional Wind Guard Kit. 37-38

INSTRUCTIONS FOR ORDERING PARTS

All service parts should be ordered through your authorized H&S dealer. They will be able to give you faster service if you will provide them with the following

1. Model & Serial number is located on the left, rear main frame of your unit.
2. All reference to left or right apply to the machine as viewed from the rear.
3. Parts should not be ordered from illustration only. Please order by complete part number.
4. If your dealer has to order parts - give shipping instructions:

   VIA truck - large pieces (please specify local truck lines)

   VIA United Parcel Service (include full address)

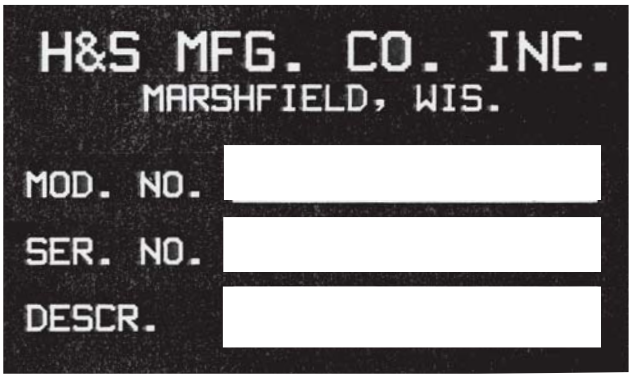

PLEASE RECORD NUMBERS FOR YOUR UNIT FOR QUICK REFERENCE

ABOUT IMPROVEMENTS

H&S IS CONTINUALLY STRIVING TO IMPROVE IT'S PRODUCTS

We must therefore, reserve the right to make improvements or changes whenever it becomes practical to do so without incurring any obligation to make changes or additions to the equipment previously sold.

FIGURE 1

12 WHEEL HI CAPACITY RAKE
MAIN FRAME REAR

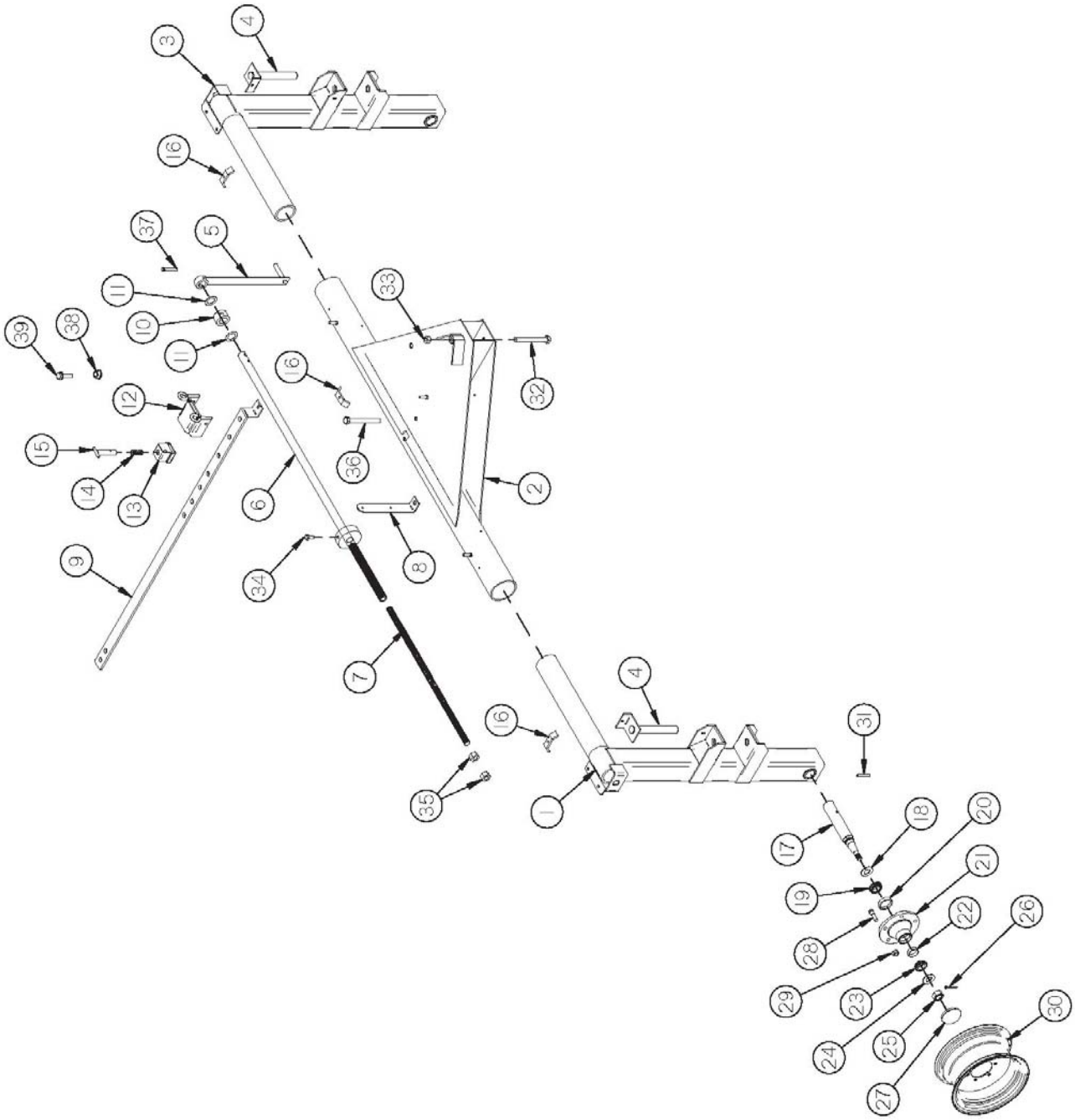

FIGURE 1

12 WHEEL HI CAPACITY RAKE
MAIN FRAME REAR

ITEM	PART #	DESCRIPTION
1	BFR754	RIGHT AXLE UPRIGHT
2	BFR498	REAR PIVOT ASSEMBLY
3	BFR755	LEFT AXLE UPRIGHT
4	BFR756	BEAM PIVOT SHAFT
5	BFR423	WIDTH ADJUSTMENT HANDLE
6	BFR485	REAR WIDTH ADJUSTMENT TUBE
7	BFR420	REAR WIDTH ADJUSTMENT ROD
8	BFR649	SMV BRACKET
9	BFR611	WIDTH ADJUSTMENT BAR
10	BFR422	WIDTH ADJUSTMENT COLLAR
11	BFR523	POLY WASHER
12	BFR613	WIDTH ADJUSTMENT STOP
13	BFR239	SLEEVE ADJUSTABLE LOCK
14	BFR240	SPRING
15	BFR241	ADJUSTMENT HANDLE
16	23N67	HOSE HOLDER
17	BFR449	SPINDLE
18	BFR57	SEAL
19	17G145	INNER BEARING
20	17G146	INNER RACE
21	BFR60	HUB
22	BFR61	OUTER RACE
23	BFR62	OUTER BEARING
*	BFR75	COMPLETE GROUND WHEEL HUB
24	YWFL24010	WASHER, FLAT, SAE 3/4, PLAIN
25	YNSL24010	HEX NUT, SLOTTED, 3/4"-16
26	YPCT05010	COTTER PIN, 5/32" X 1-1/2"
27	BFR66	HUB CAP
28	YBSD16005	STUD BOLT, 1/2"-20 UNF X 1-7/8" (3/8" SHOULDER)
29	YNWL16005	WHEEL NUT, 1/2"-20 UNF
30	BFR67	WHEEL 5 X 15
31	YPEX12025	EXPANSION PIN, 3/8" X 2-3/4"
32	YBHH20110	BOLT, 5/8" X 8" GR. 5
33	YNHX20005	HEX NUT, 5/8"-11 PLATED
34	YBHH16010	BOLT, 1/2" X 1" GR. 5
35	YNAC24005	HEX NUT, ACME, 3/4"-6
36	YBHH20085	BOLT, 5/8" X 5" GR. 5
37	YBHH12090	BOLT, 3/8" X 2-1/2" GR. 5
38	BFR642	WIDTH ADJUSTMENT SPACER
39	YSHW10010	5/16"-18 X 1-1/4" HEX WASHER SLOT TYPE F ZINC THREAD CUTTING SCREW

NOTE: * MEANS NOT SHOWN

TANDEM OPTIONS: BFR509 RH TANDEM AXLE
BFR510 LH TANDEM AXLE

FIGURE 2

12 WHEEL HI CAPACITY RAKE
MAIN FRAME POLE AND LINKAGE

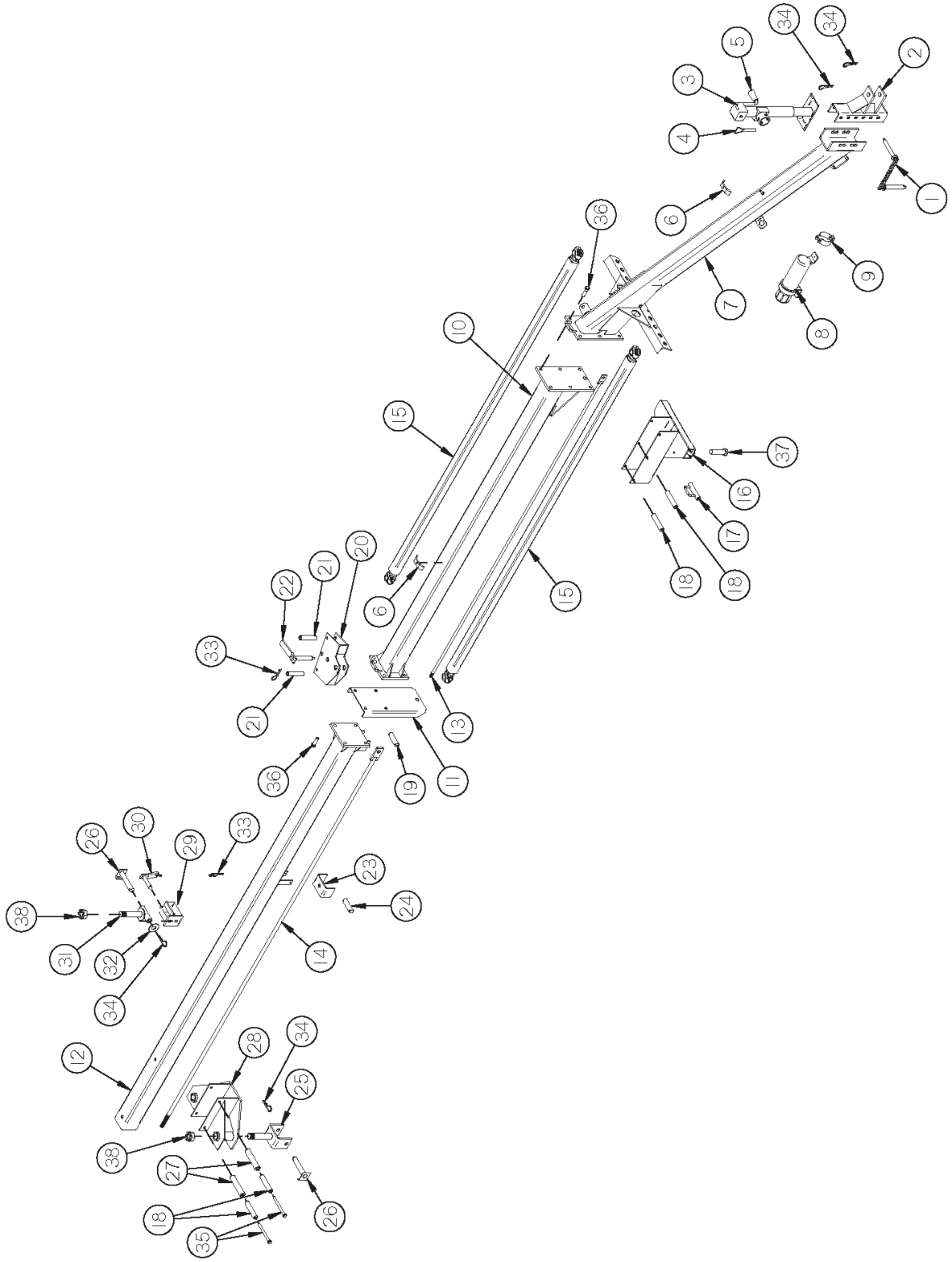

FIGURE 2

12 WHEEL HI CAPACITY RAKE
MAIN FRAME POLE AND LINKAGE

ITEM	PART#	DESCRIPTION
1	BFR450	HITCH PIN
2	BFR157	HITCH
3	BFR753	JACK
4	12N117	JACK PIN & CHAIN
5	5N78	JACK HANDLE
*	12N118	REPLACEMENT BEARING
6	HE42	HOSE HOLDER
7	BFR660	POLE
8	S522	MANUAL HOLDER
9	S523	MANUAL CLAMP - LARGE
10	BFR385	CENTER POLE SECTION
11	BFR399	LINKAGE STOP
12	BFR397	BACK POLE SECTION
13	BFR502	FRONT ROD
*	YNHX24010	HEX NUT, 3/4-16
*	YNSF24006	HEX NUT, SERRATED FLANGE 3/4"-16
14	BFR503	BACK ROD
*	YNHX24010	HEX NUT, 3/4-16
*	YNSF24006	HEX NUT, SERRATED FLANGE 3/4"-16
15	BFR390	FRONT LINKAGE
16	BFR387	FRONT LINKAGE SLIDER
17	BFR388	HOSE GUIDE SPACER
18	BFR389	SLIDER SPACER
19	BFR396	CYLINDER PIN
20	BFR398	CENTER SLIDER
21	BFR400	CENTER SLIDER SPACER
22	BFR401	CENTER SLIDER PIN
23	BFR402	HOSE GUIDE
24	BFR634	CYLINDER PIN
25	BFR410	BACK LINKAGE YOKE RH
26	BFR413	PIVOT YOKE SHAFT PIN
27	BFR404	BACK SLIDER ROLLER
28	BFR440	BACK LINKAGE SLIDER
29	BFR411	BACK LINKAGE YOKE LH
30	BFR412	BACK LINKAGE YOKE PIN
31	BFR414	LEFT PIVOT YOKE SHAFT
32	BFR441	STOP WASHER
33	YPHR02010	HAIR PIN, #21-07
34	YPHR06040	HAIR PIN, 3/16" X 3-3/4"
35	YBHH16160	BOLT, 1/2" X 5-1/2" GR. 5
36	YBHH20025	BOLT, 5/8" X 2" GR. 5
37	YBHH32010	BOLT, 1"-8 X 3-1/2" GR. 5
38	YNSL36005	HEX NUT, SLOTTED, 1-1/4"-12

NOTE: * MEANS NOT SHOWN

FIGURE 3

12 HI CAPACITY RAKE
RAKE BEAMS AND ARMS

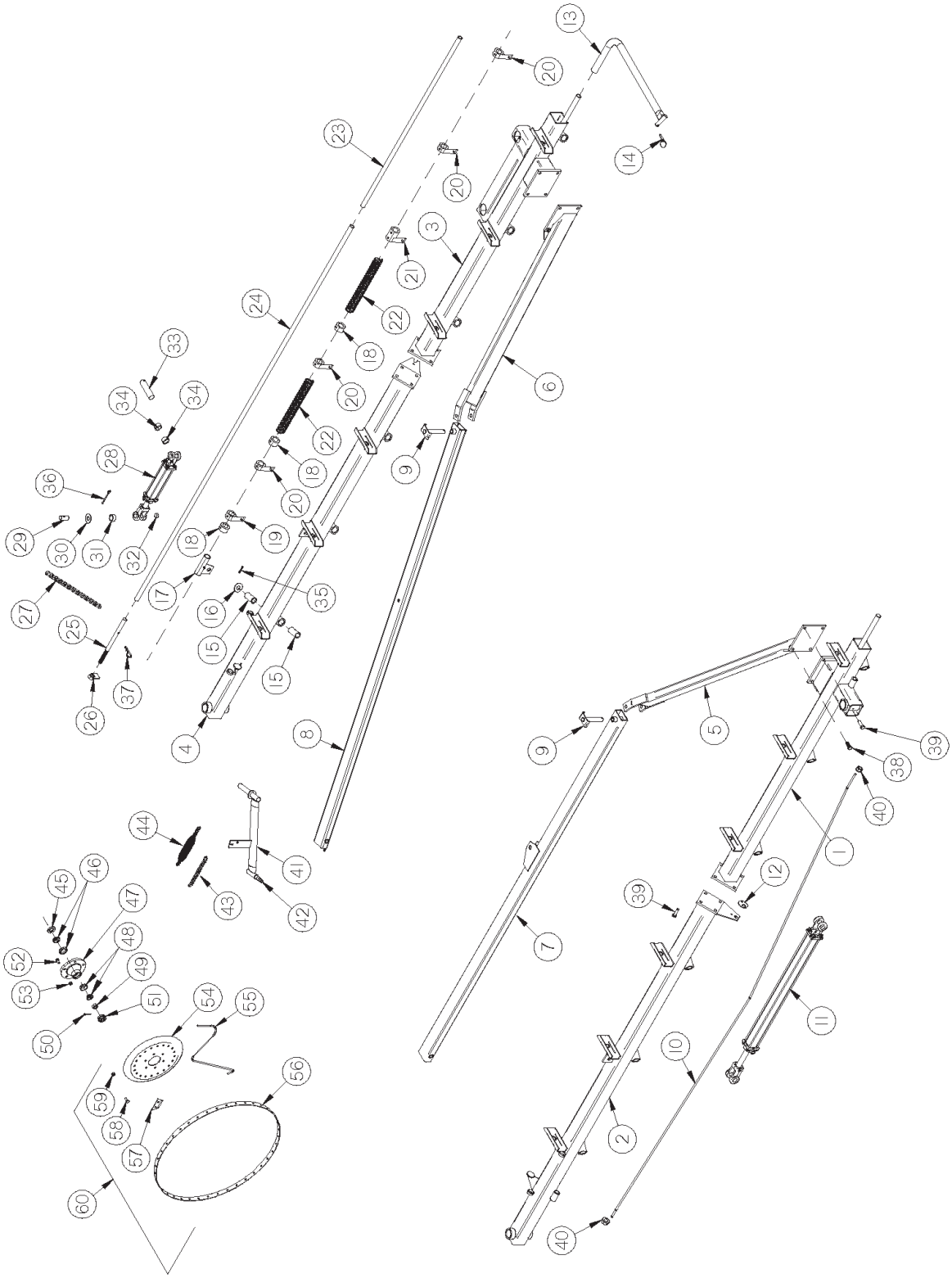

FIGURE 3

12 HI CAPACITY RAKE
RAKE BEAMS AND ARMS

ITEM	PART #	DESCRIPTION
1	BFR406	FRONT RAKE BEAM RH
2	BFR758	BACK RAKE BEAM RH
3	BFR407	FRONT RAKE BEAM LH
4	BFR759	BACK RAKE BEAM LH
5	BFR391	RAKE BEAM ARM RH
6	BFR392	RAKE BEAM ARM LH
7	BFR394	RIGHT REAR LINKAGE
8	BFR395	LEFT REAR LINKAGE
9	BFR393	RAKE BEAM ARM PIN
10	BFR612	SIDE ARM STABILIZER ROD
11	56004	HYDRAULIC CYLINDER
12	DF22	WASHER
13	BFR384	TRANSPORT LOCK PIPE LH
*	BFR415	TRANSPORT LOCK PIPE RH
14	BFR443	LYNCH PIN
15	BFR425	RAKE ARM BUSHING W/ FLANGE
16	BFR229	RAKE ARM WASHER
17	BFR428	HYDRAULIC CYLINDER END SLIDE LH
*	BFR429	HYDRAULIC CYLINDER END SLIDE RH
18	BFR82	PIPE CLAMPS
19	BFR622	SPRING BRACKET (2 HOLE)
20	BFR431	LH SPRING BRACKET
*	BFR430	RH SPRING BRACKET
21	BFR432	LH LIFTING PIPE CONNECTOR
*	BFR433	RH LIFTING PIPE CONNECTOR
22	BFR84	COMPRESSION SPRING
23	BFR520	LIFTING PIPE FRONT
24	BFR519	LIFTING PIPE BACK
25	BFR427	RAKE ARM LOCK-UP SHAFT
26	BFR426	RAKE PRESSURE HANDLE
27	BFR111	BACK RAKE ARM ADJUSTMENT CHAIN
28	55999	HYDRAULIC LIFT CYLINDER
29	BFR517	CYLINDER PIN
30	16SV136	WASHER
31	K106	CYLINDER SPACER

NOTE: * MEANS NOT SHOWN

FIGURE 3

12 HI CAPACITY RAKE
RAKE BEAMS AND ARMS

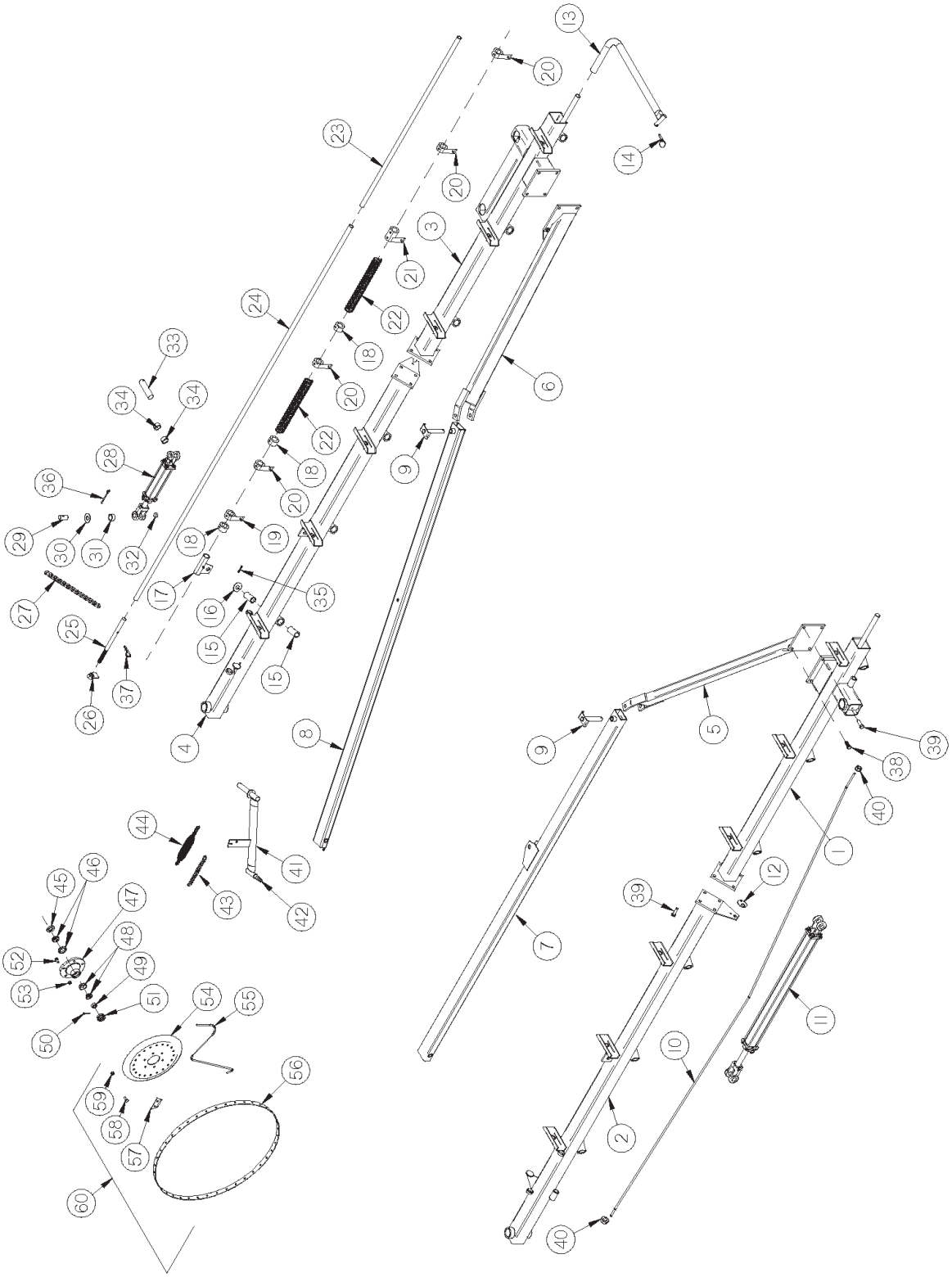

FIGURE 3

12 HI CAPACITY RAKE
RAKE BEAMS AND ARMS

ITEM	PART#	DESCRIPTION
32	BFR506	NYLON WEAR BLOCK CYLINDER
33	T143	PIN
34	X94	CYLINDER SPACERS EXPANSION
35	YPEX10015	PIN, 5/16" X 1-3/4" COTTER PIN,
36	YPCT07005	7/32" X 2 “
37	YPHR08040	HAIR PIN, 1/4" X 5"
38	YBHH20020	BOLT, 5/8" X 1-3/4" GR. 5
39	YBHH20025	BOLT, 5/8" X 2" GR. 6
40	YNFG24005	HEX NUT, FLANGED-LOCK, 3/4"-10
41	BFR436	RAKE ARM LH
*	BFR437	RAKE ARM RH
42	BFR36	RAKE ARM SPINDLE
43	BFR140	RAKE ARM ADJUSTMENT CHAIN
44	BFR138	RAKE ARM SPRING
45	T163	SEAL
46	600012	INNER BEARING RACE
47	BFR32	RAKE WHEEL HUB
48	600012	INNER BEARING RACE
49	YNSL24010	HEX NUT,SLOTTED, 3/4"-16
50	YPCT05010	COTTER PIN, 5/32" X 1-1/2"
51	T173	HUB CAP
52	BFR76	COMPLETE HUB
53	YBHH76005	BOLT, 10MM X 25MM
*	YNHX76015	HEX NUT, 10MM
54	T179	RAKE WHEEL CENTER
55	T176	RAKE WHEEL TOOTH
56	T177	OUTER RING
57	T178	RAKE TOOTH CLIP
58	YBCR76005	CARR. BOLT, 10MM X 25MM
59	YNCL76005	10MM TOP LOCK NUT
60	T174	RAKE WHEEL LH
*	BFR31	RAKE WHEEL RH

NOTE: * MEANS NOT SHOWN

FIGURE 4

12 & 14 HI CAPACITY RAKE GAUGE WHEEL

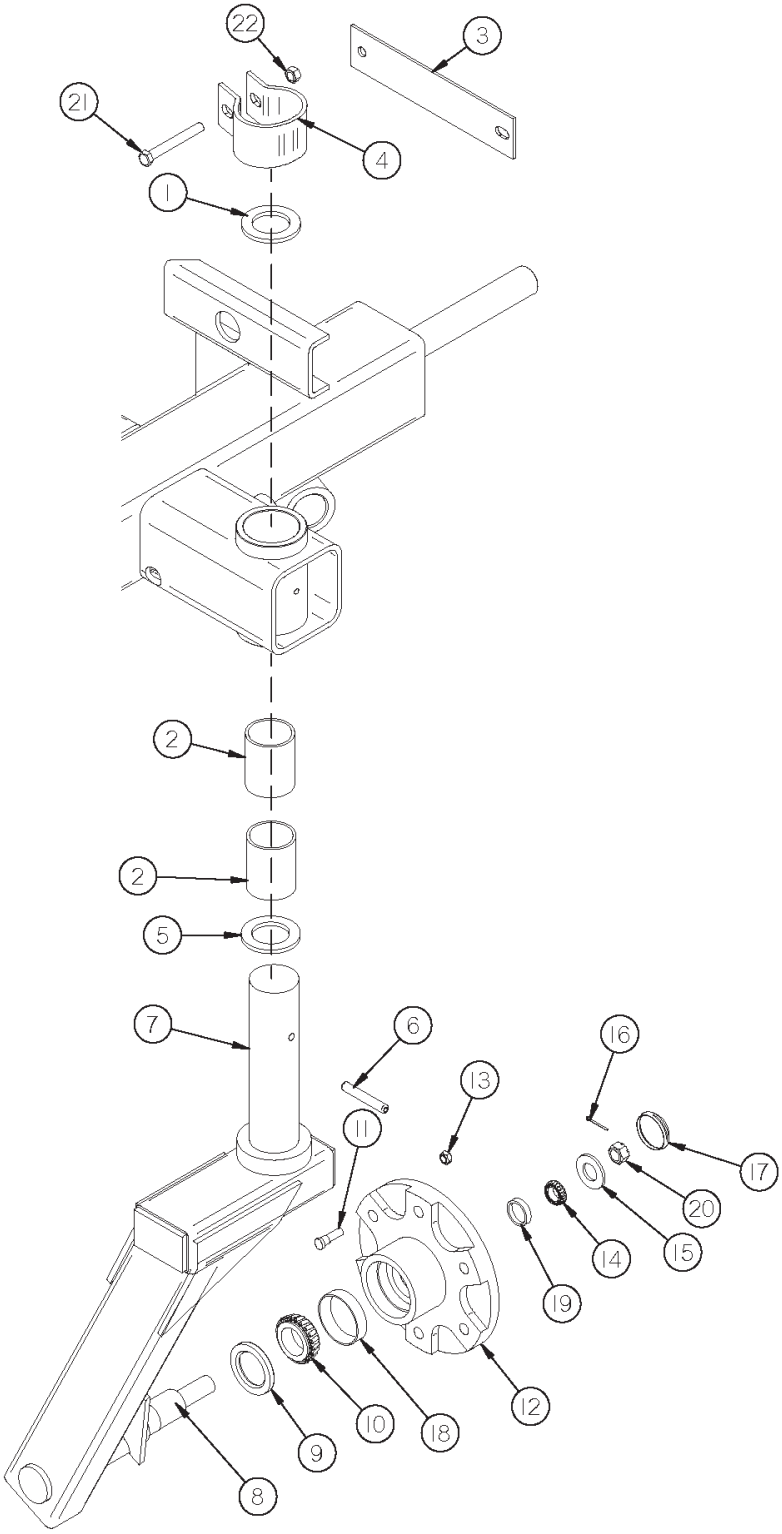

FIGURE 4

12 & 14 HI CAPACITY RAKE GAUGE WHEEL

ITEM	PART #	DESCRIPTION
1	BFR309	GAUGE WHEEL WASHER
2	RG26	BUSHING, BRONZE,
3	BFR310	BRAKE PAD (2)
4	BFR311	BRAKE COLLAR
5	RG24	BRONZE WASHER
6	YPEX10025	EXPANSION PIN, 5/16" X 2-3/4"
7	BFR312	COMPLETE FORK RH
*	BFR316	COMPLETE FORK LH
8	BFR56	SPINDLE
9	BFR57	SEAL
10	BFR58	INNER BEARING
11	YBSD16005	STUD BOLT, 1/2"-20 UNF X 1-7/8" (3/8" SHOULDER)
12	BFR60	HUB
13	YNWL16005	WHEEL NUT, 1/2"-20 UNF
14	BFR62	OUTER BEARING
15	YWFL24010	WASHER, FLAT, SAE 3/4, PLAIN
16	YPCT05010	COTTER PIN, 5/32" X 1-1/2"
17	BFR66	HUB CAP
18	BFR59	INNER RACE
19	BFR61	OUTER RACE
20	YNSL24010	HEX NUT, SLOTTED, 3/4"-16
*	BFR75	COMPLETE HUB FOR GROUND WHEEL
21	YBHH12125	BOLT, 3/8" X 3" GR. 5 FULL THREAD
22	YNHX12005	HEX NUT, 3/8"-16
*	BFR67	WHEEL 5 X 15
*	BFR128	6.70 X 15 TIRE

NOTE: * MEANS NOT SHOWN

FIGURE 5

12 HI CAPACITY RAKE HYDRAULICS

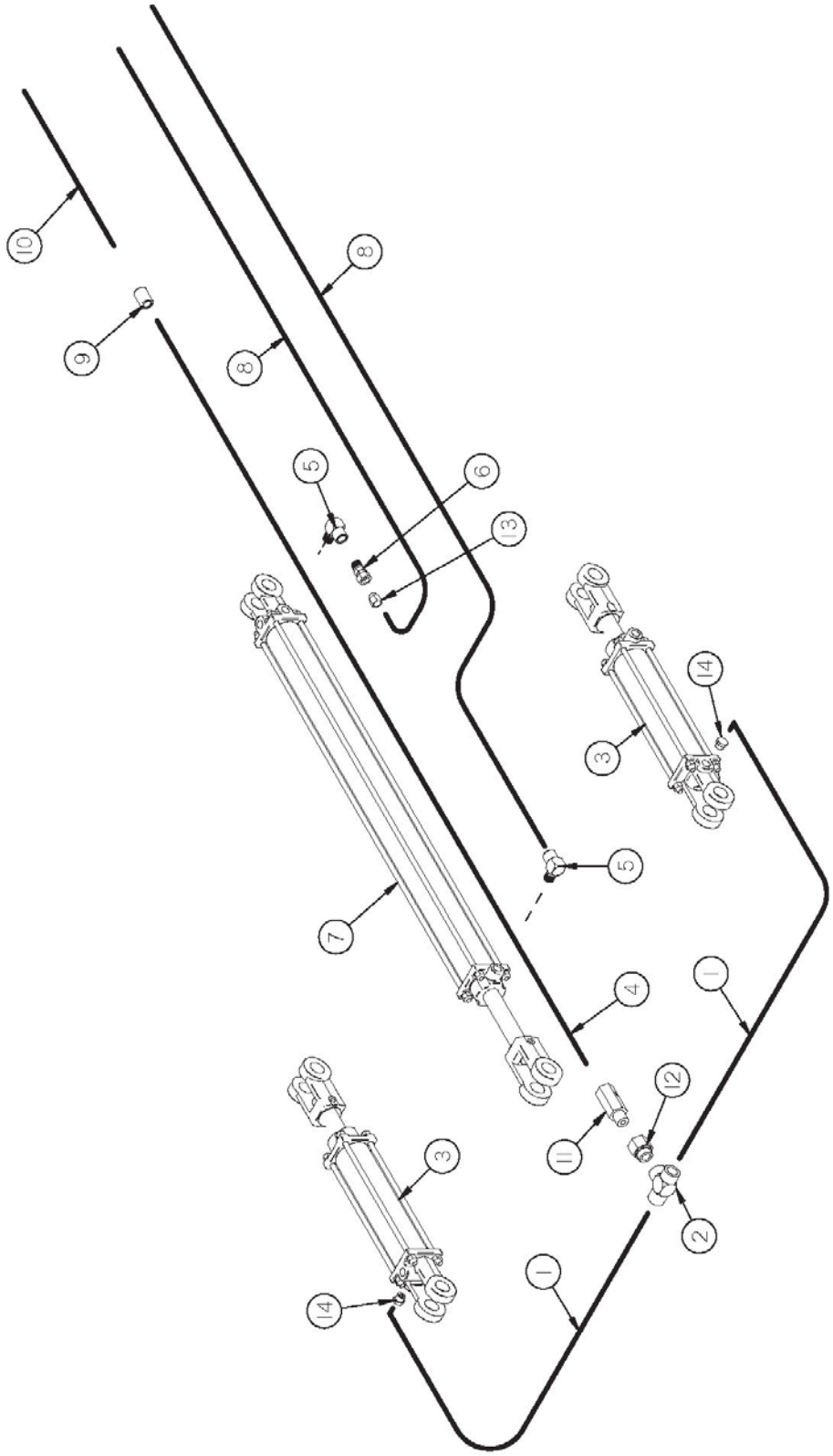

FIGURE 5

12 HI CAPACITY RAKE HYDRAULICS

ITEM	PART #	DESCRIPTION
1	37N60	108" HOSE
2	BFR74	3/8" FEMALE TEE
3	55999	HYDRAULIC LIFT CYLINDER
4	23N302	264" HOSE
5	23N234	3/8" STREET ELBOW
6	58723	MALE ADAPTER UNION W/ ORIFICE
7	56004	HYDRAULIC OPEN CYLINDER
8	BFR621	256" HOSE
9	HE60	3/8" PIPE COUPLER
10	BFR448	66" HOSE
11	BFR554	FLOW VALVE
12	BFR555	ADAPTER
13	BFR747	PIPE EXP. PLUG
14	BFR70	VENT PLUG

FIGURE 6

12 HI CAPACITY RAKE
HYDRAULIC LIFT CYLINDER

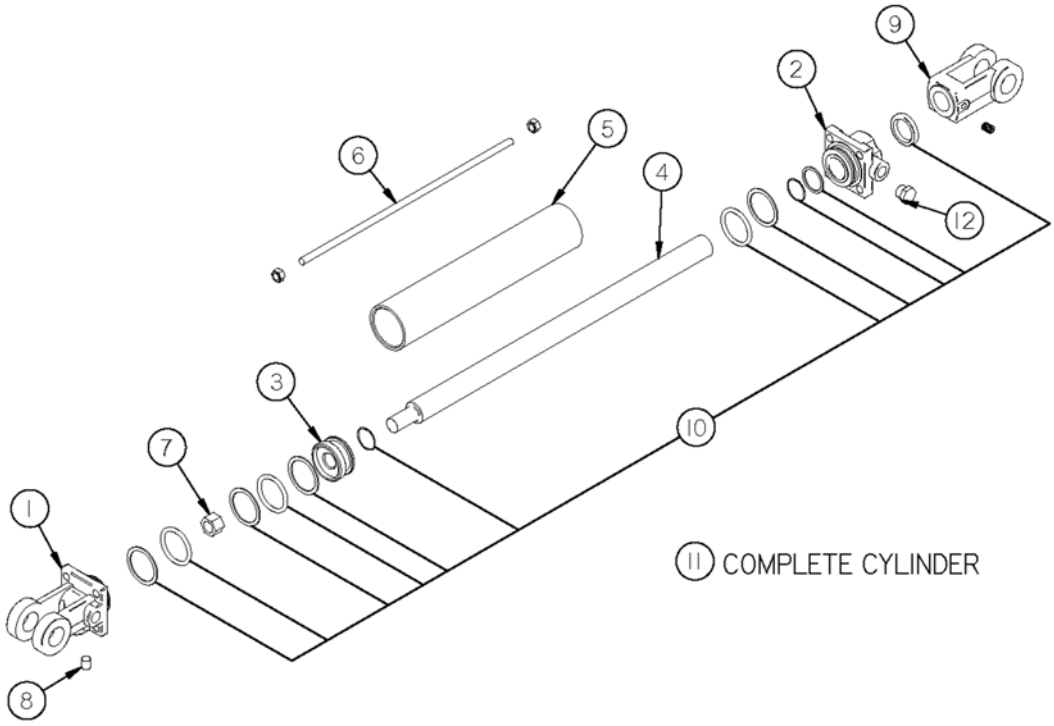

ITEM	PART #	DESCRIPTION
1	23N142A	CLEVIS CAP
2	56174	ROD CAP
3	56180	PISTON
4	T184A	ROD
5	BFR68	CYLINDER TUBE
6	T186	TIE ROD
7	23N148	PISTON NUT
8	23N149	PLUG
9	23N150A	ROD CLEVIS
10	56187	SEAL KIT
11	55999	COMPLETE CYLINDER
12	BFR70	VENT PLUG

FIGURE 7

12 & 14 HI CAPACITY RAKE OPENING CYLINDER

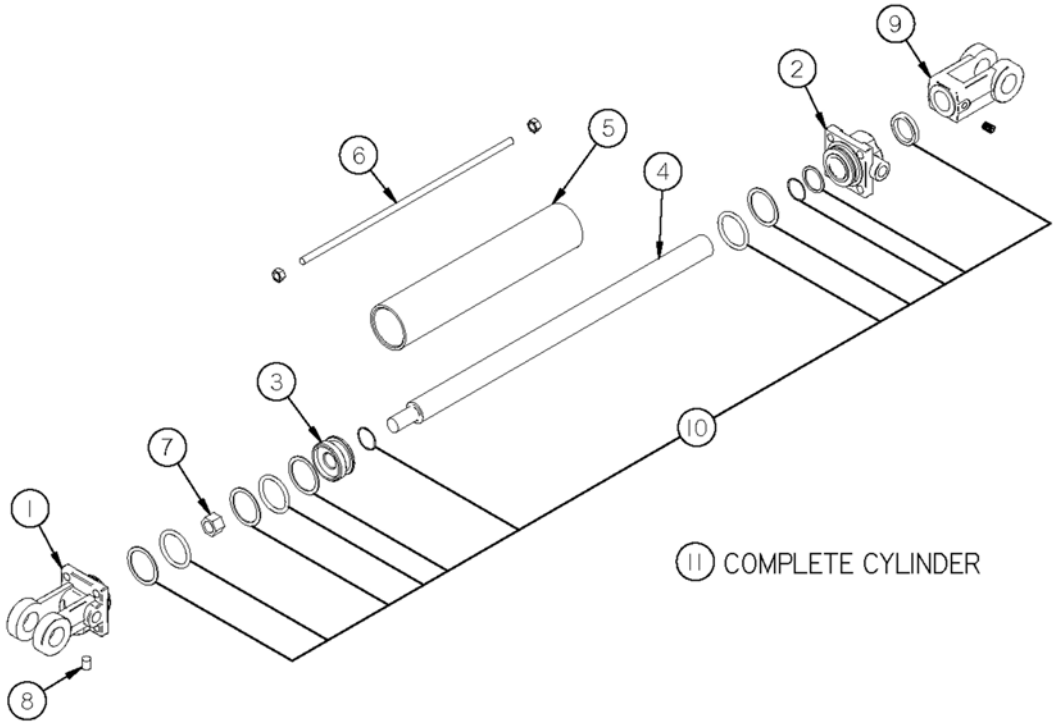

ITEM	PART #	DESCRIPTION
1	23N142A	CLEVIS CAP
2	56174	ROD CAP
3	56180	PISTON
4	BFR654	ROD
5	BFR655	CYLINDER TUBE
6	BFR656	TIE ROD
7	23N148	PISTON NUT
8	23N149	PLUG
9	23N150A	ROD CLEVIS
10	56187	SEAL KIT
11	56004	COMPLETE CYLINDER

FIGURE 8

14 HI CAPACITY RAKE
MAIN FRAME REAR

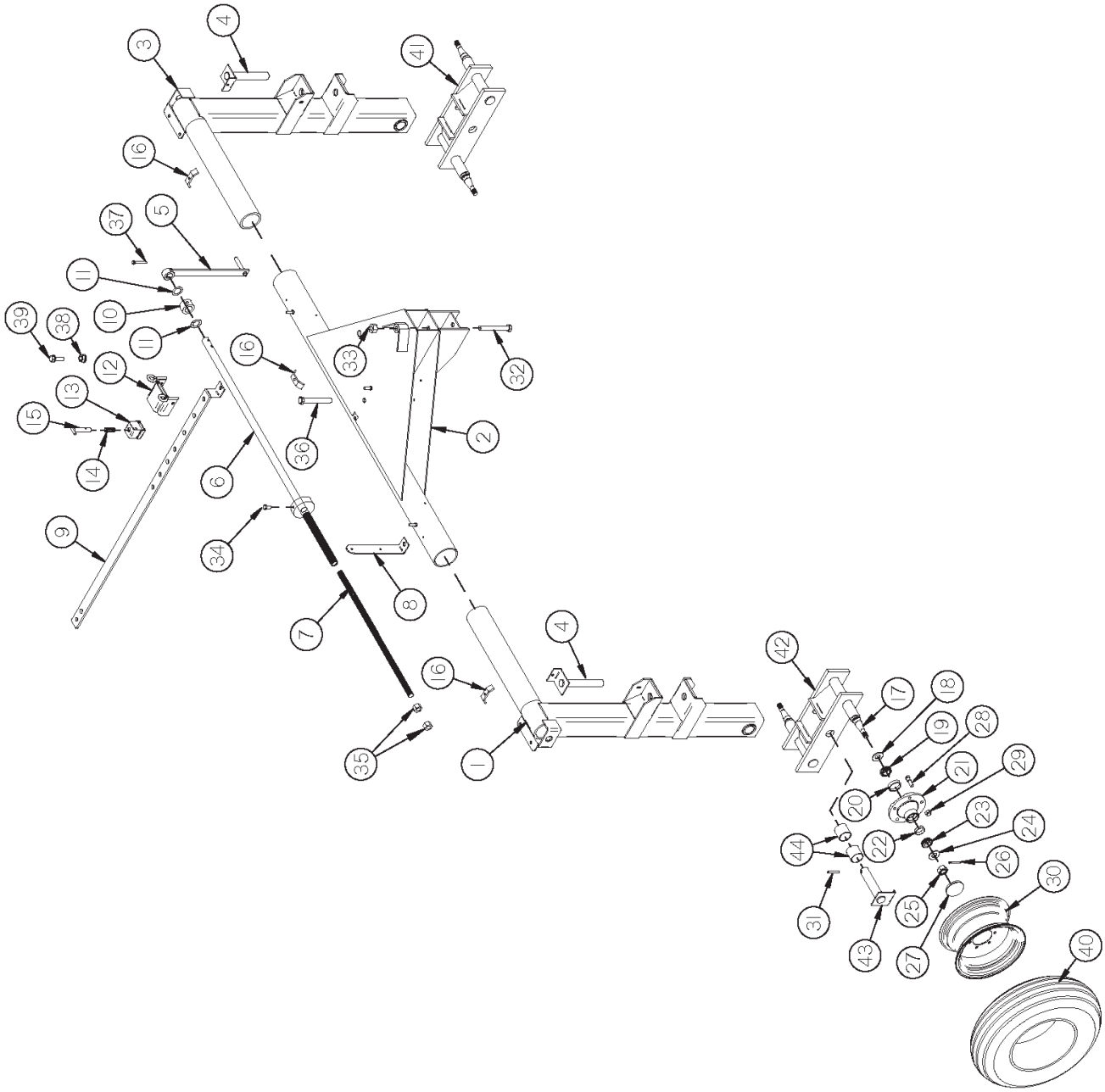

FIGURE 8

14 HI CAPACITY RAKE
MAIN FRAME REAR

ITEM	PART #	DESCRIPTION
1	BFR754	RIGHT AXLE UPRIGHT
2	BFR709	REAR PIVOT ASSEMBLY
3	BFR755	LEFT AXLE UPRIGHT
4	BFR756	BEAM PIVOT SHAFT
5	BFR423	WIDTH ADJUSTMENT HANDLE
6	BFR485	REAR WIDTH ADJUSTMENT TUBE
7	BFR420	REAR WIDTH ADJUSTMENT ROD
8	BFR649	SMV BRACKET
9	BFR611	WIDTH ADJUSTMENT BAR
10	BFR422	WIDTH ADJUSTMENT COLLAR
11	BFR523	POLY WASHER
12	BFR616	WIDTH ADJUSTMENT STOP
13	BFR239	SLEEVE ADJUSTABLE LOCK
14	BFR240	SPRING
15	BFR241	ADJUSTMENT HANDLE
16	23N67	HOSE HOLDER
17	BFR522	SPINDLE
18	BFR57	SEAL
19	17G145	INNER BEARING
20	17G146	INNER RACE
21	BFR60	HUB
22	BFR61	OUTER RACE
23	BFR62	OUTER BEARING
24	YWFL24010	WASHER, FLAT, SAE 3/4, PLAIN
25	YNSL24010	HEX NUT, SLOTTED, 3/4"-16
26	YPCT05010	COTTER PIN, 5/32" X 1-1/2"
27	BFR66	HUB CAP
28	YBSD16005	STUD BOLT, 1/2"-20 UNF X 1-7/8" (3/8" SHOULDER)
29	YNWL16005	WHEEL NUT, 1/2"-20 UNF
*	BFR75	COMPLETE HUB FOR GROUND WHEEL
30	BFR67	WHEEL 5 X 15
31	YPEX12025	EXPANSION PIN, 3/8" X 2-3/4"
32	YBHH24115	BOLT, 3/4" X 8-1/2" GR. 5
33	YNHX24010	HEX NUT, 3/4"-16
34	YBHH16010	BOLT, 1/2" X 1" GR. 5
35	YNAC24005	HEX NUT, ACME, 3/4"-6
36	YBHH24090	BOLT, 3/4" X 6" GR. 5
37	YBHH12090	BOLT, 3/8" X 2-1/2" GR. 5
38	BFR642	WIDTH ADJUSTMENT SPACER
39	YSHW10010	5/16"-18 X 1-1/4" HEX WASHER SLOT TYPE F ZINC THREAD CUTTING SCREW
40	BFR128	TIRE (6.70 X 15)
41	BFR510	LH TANDEM AXLE
42	BFR509	RH TANDEM AXLE
43	BFR524	TANDEM PIN
44	56244	BUSHING

NOTE: * MEANS NOT SHOWN

FIGURE 9

14 HI CAPACITY RAKE
MAIN FRAME POLE AND LINKAGE

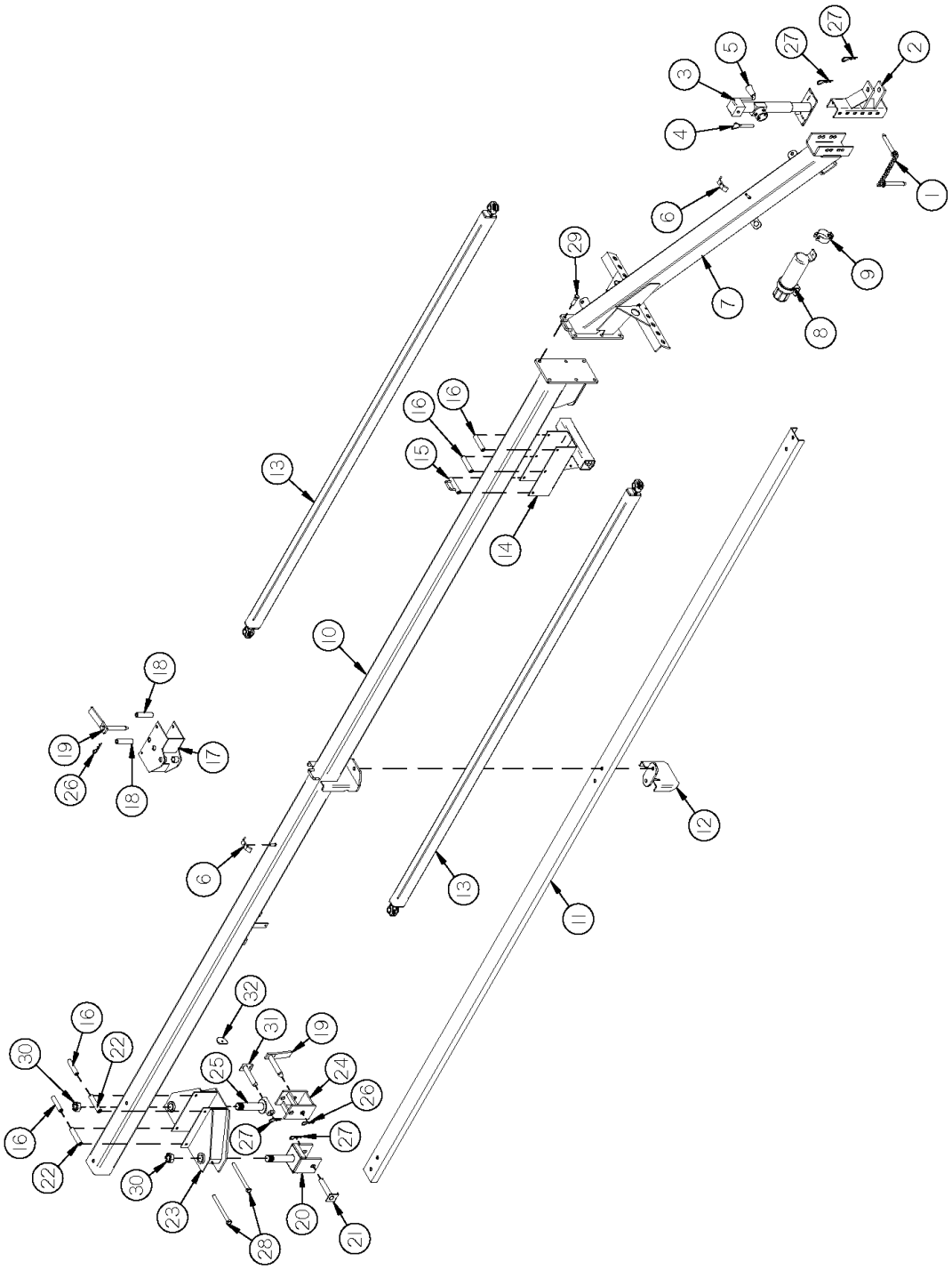

FIGURE 9

14 HI CAPACITY RAKE
MAIN FRAME POLE AND LINKAGE

ITEM	PART #	DESCRIPTION
1	BFR450	HITCH PIN
2	BFR157	HITCH
3	BFR753	JACK
4	12N117	JACK PIN & CHAIN
5	5N78	JACK HANDLE
*	12N118	REPLACEMENT BEARING
6	HE42	HOSE HOLDER
7	BFR663	POLE
8	S522	MANUAL HOLDER
9	55797	MANUAL HOLDER BRACKET
10	14DWE81	POLE
11	14DCH07	POLE CHANNEL
12	14DWE83	MIDDLE LINKAGE STOP BOTTOM
13	BFR458	FRONT LINKAGE
14	BFR455	FRONT LINKAGE SLIDER
15	BFR456	HOSE GUIDE SPACER
16	BFR457	SLIDER SPACER
17	BFR465	CENTER SLIDER
18	BFR467	CENTER SLIDER SPACER
19	BFR468	LINKAGE PIN
20	BFR476	BACK LINKAGE YOKE RH
21	BFR479	PIVOT YOKE SHAFT PIN RH
22	BFR471	BACK SLIDER ROLLER
23	BFR491	BACK LINKAGE SLIDER
24	BFR477	BACK LINKAGE YOKE LH
25	BFR480	LEFT PIVOT YOKE SHAFT
26	YPHR02010	HAIR PIN, #21-07
27	YPHR06040	HAIR PIN, 3/16" X 3-3/4"
28	YBHH16165	BOLT, 1/2" X 6" GR. 5
29	YBHH20025	BOLT, 5/8" X 2" GR. 5
30	YNSL40005	HEX NUT, SLOTTED, 1-1/2"-12
31	BFR505	PIVOT YOKE SHAFT PIN LH
32	BFR693	STOP WASHER

NOTE: * MEANS NOT SHOWN

FIGURE 10

14 HI CAPACITY RAKE
RAKE BEAMS AND ARMS

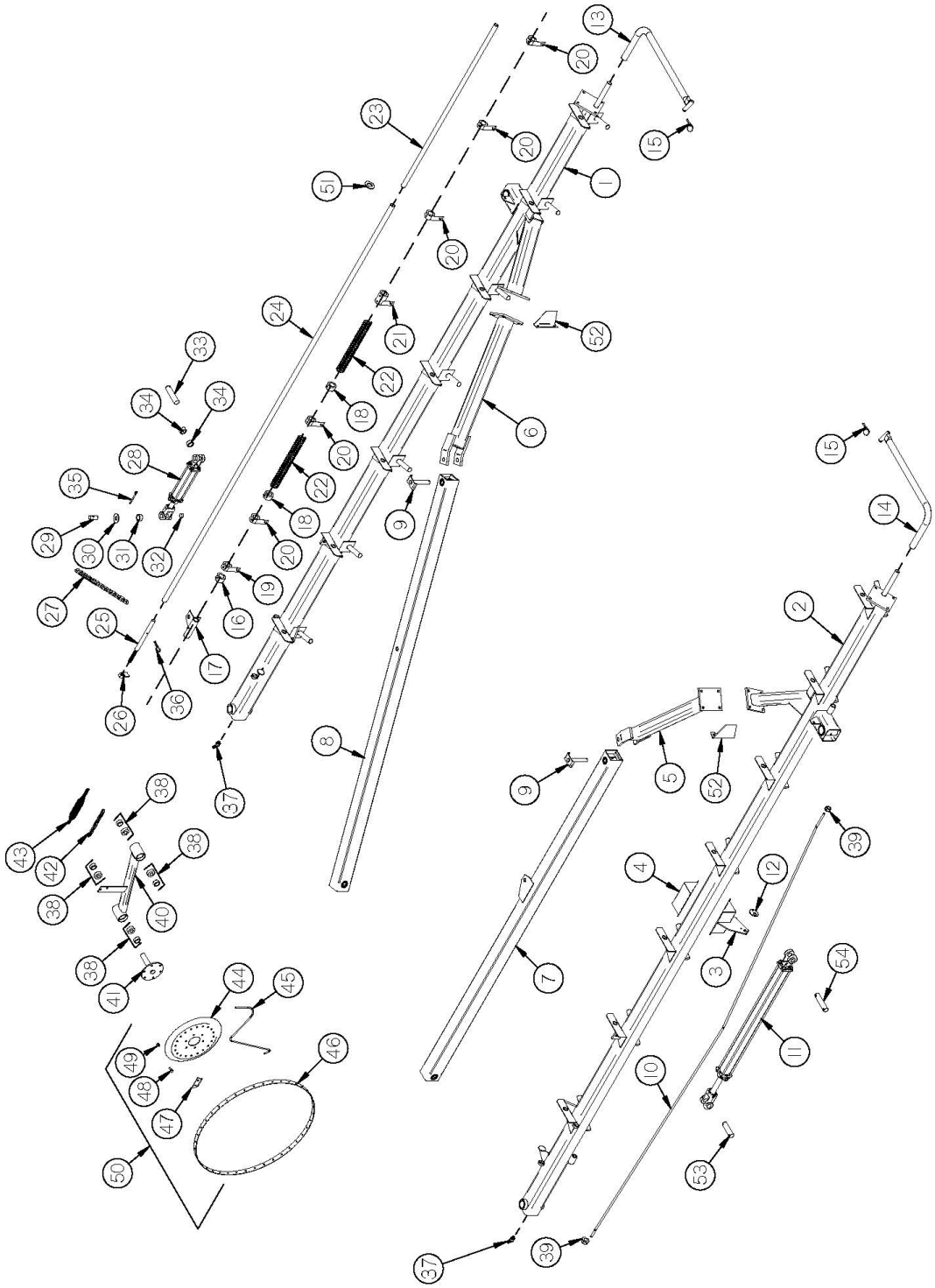

FIGURE 10

14 HI CAPACITY RAKE
RAKE BEAMS AND ARMS

ITEM	PART #	DESCRIPTION
1	14DWE86	RAKE BEAM LEFT
2	14DWE89	RAKE BEAM RIGHT
3	14DWE85	ROD STAND-OFF
4	14D3G18	ROD STAND-OFF BRACKET
5	BFR744	RAKE BEAM ARM RH
6	BFR745	RAKE BEAM ARM LH
7	BFR462	RIGHT REAR LINKAGE
8	BFR463	LEFT REAR LINKAGE
9	BFR461	RAKE BEAM ARM PIN
10	BFR612	SIDE ARM STABILIZER ROD
11	56004	HYDRAULIC CYLINDER
12	DF22	WASHER
13	BFR452	TRANSPORT LOCK PIPE LH
14	BFR492	TRANSPORT LOCK PIPE RH
15	BFR443	LYNCH PIN
16	BFR83	PIPE CLAMP (2 HOLES)
17	BFR530	HYDRAULIC CYLINDER END SLIDE LH
*	BFR531	HYDRAULIC CYLINDER END SLIDE RH
18	BFR82	PIPE CLAMPS
19	BFR622	SPRING BRACKET (2 HOLE)
20	BFR431	LH SPRING BRACKET
*	BFR430	RH SPRING BRACKET
21	BFR749	RH LONG LIFT PIPE CONNECTOR
*	BFR750	LH LONG LIFT PIPE CONNECTOR
22	BFR84	COMPRESSION SPRING
23	BFR520	LIFTING PIPE FRONT
24	BFR521	LIFTING PIPE BACK
25	BFR486	RAKE ARM LOCK-UP SHAFT
26	BFR426	RAKE PRESSURE HANDLE
27	BFR111	BACK RAKE ARM ADJUSTMENT CHAIN

NOTE: * MEANS NOT SHOWN

FIGURE 10

14 HI CAPACITY RAKE
RAKE BEAMS AND ARMS

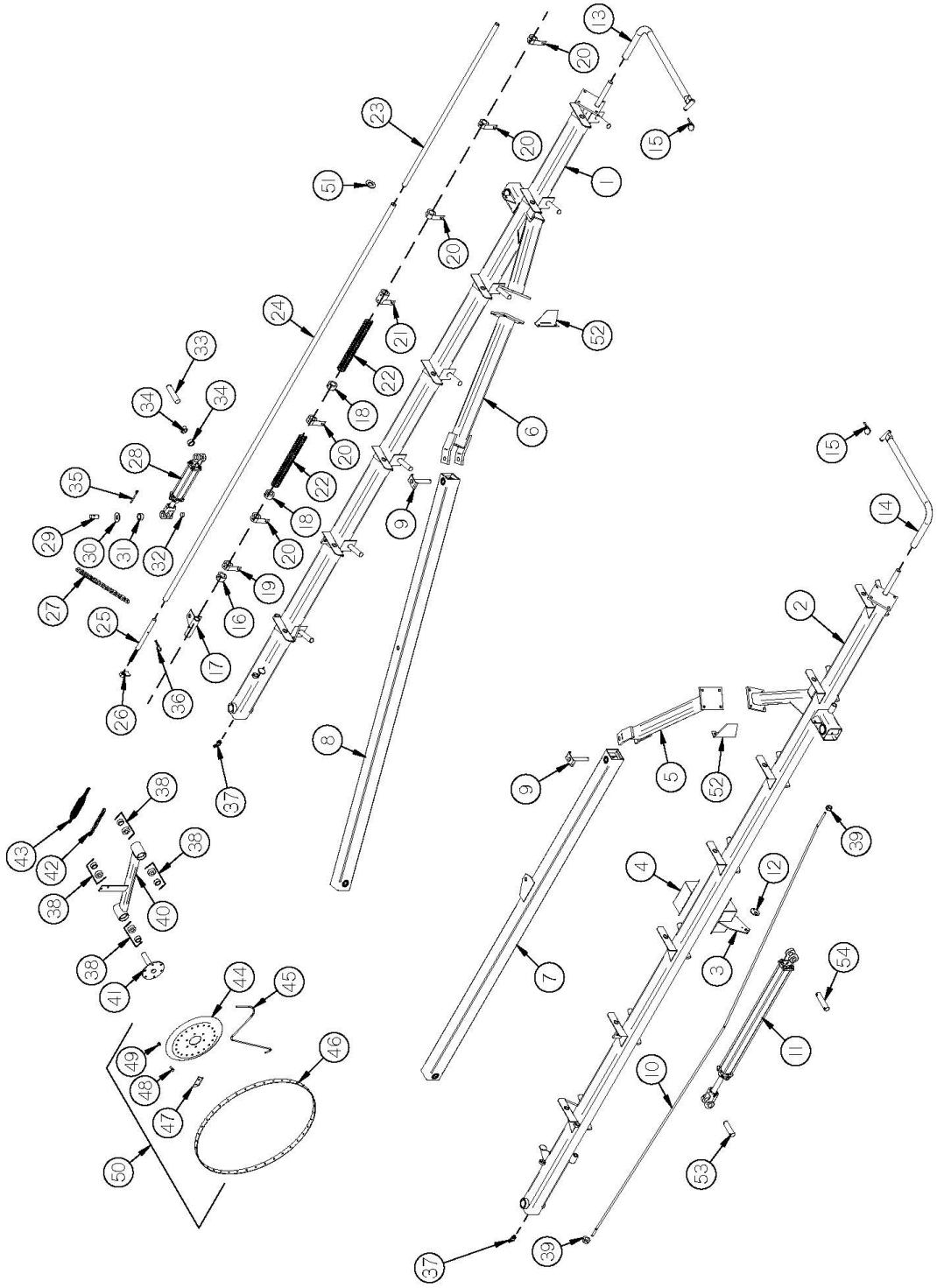

FIGURE 10

14 HI CAPACITY RAKE
RAKE BEAMS AND ARMS

ITEM	PART #	DESCRIPTION
28	56000	HYDRAULIC CYLINDER
29	BFR517	CYLINDER PIN
30	16SV136	WASHER
31	K106	CYLINDER SPACER
32	BFR506	NYLON WEAR BLOCK
33	T143	CYLINDER PIN
34	X94	CYLINDER SPACERS
35	YPCT07005	COTTER PIN, 7/32" X 2 “
36	YPHR08040	HAIR PIN, 1/4" X 5"
37	RG21	GREASE ZERK
38	BFR525	BEARING 1-1/4", W/LOCK COLLAR
39	YNFG24005	HEX NUT, FLANGED-LOCK, 3/4"-10
40	BFR489	RAKE ARM LH
*	BFR490	RAKE ARM RH
41	BFR657	RAKE WHEEL HUB
42	BFR140	RAKE ARM ADJUSTMENT CHAIN
43	BFR138	RAKE ARM SPRING
44	T179	RAKE WHEEL CENTER
45	T176	RAKE WHEEL TOOTH
46	T177	OUTER RING
47	T178	RAKE TOOTH CLIP
48	YBCR76005	CARR. BOLT, 10MM X 25MM
49	YNCL76005	10MM TOP LOCK NUT
50	T174	RAKE WHEEL LH
*	BFR31	RAKE WHEEL RH
51	BFR641	WASHER
52	BRF549	TOOTH DEFLECTOR
53	BFR634	FRONT WIDTH CYLINDER PIN
54	BFR396	CYLINDER PIN

NOTE: * MEANS NOT SHOWN

FIGURE 11

14 HI CAPACITY RAKE HYDRAULICS

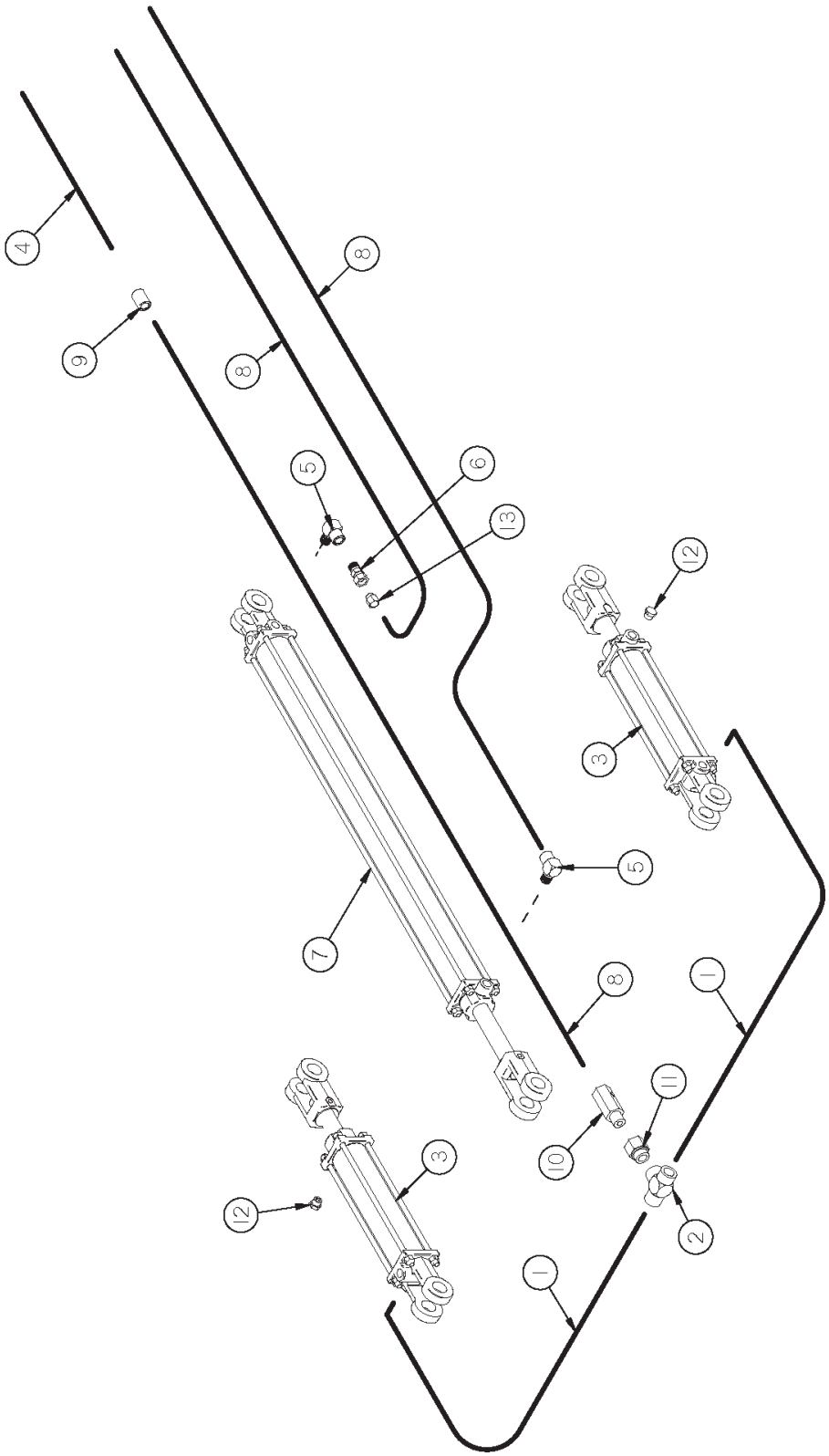

FIGURE 11

14 HI CAPACITY RAKE HYDRAULICS

ITEM	PART #	DESCRIPTION
1	37N60	108" HOSE
2	BFR74	3/8" FEMALE TEE
3	56000	HYDRAULIC LIFT CYLINDER
4	BFR448	66" HOSE
5	23N234	3/8" STREET ELBOW
6	58721	MALE ADAPTER UNION W/OFIRICE
7	56004	HYDRAULIC OPEN CYLINDER
8	27N45	288" HOSE
9	HE60	3/8" PIPE COUPLER
10	BFR554	FLOW VALVE
11	BFR555	ADAPTER
12	BFR120	ORIFICE (.062)
13	BFR747	PIPE EXPANSION COUPLING

FIGURE 12

14 HI CAPACITY RAKE
HYDRAULIC LIFT CYLINDER

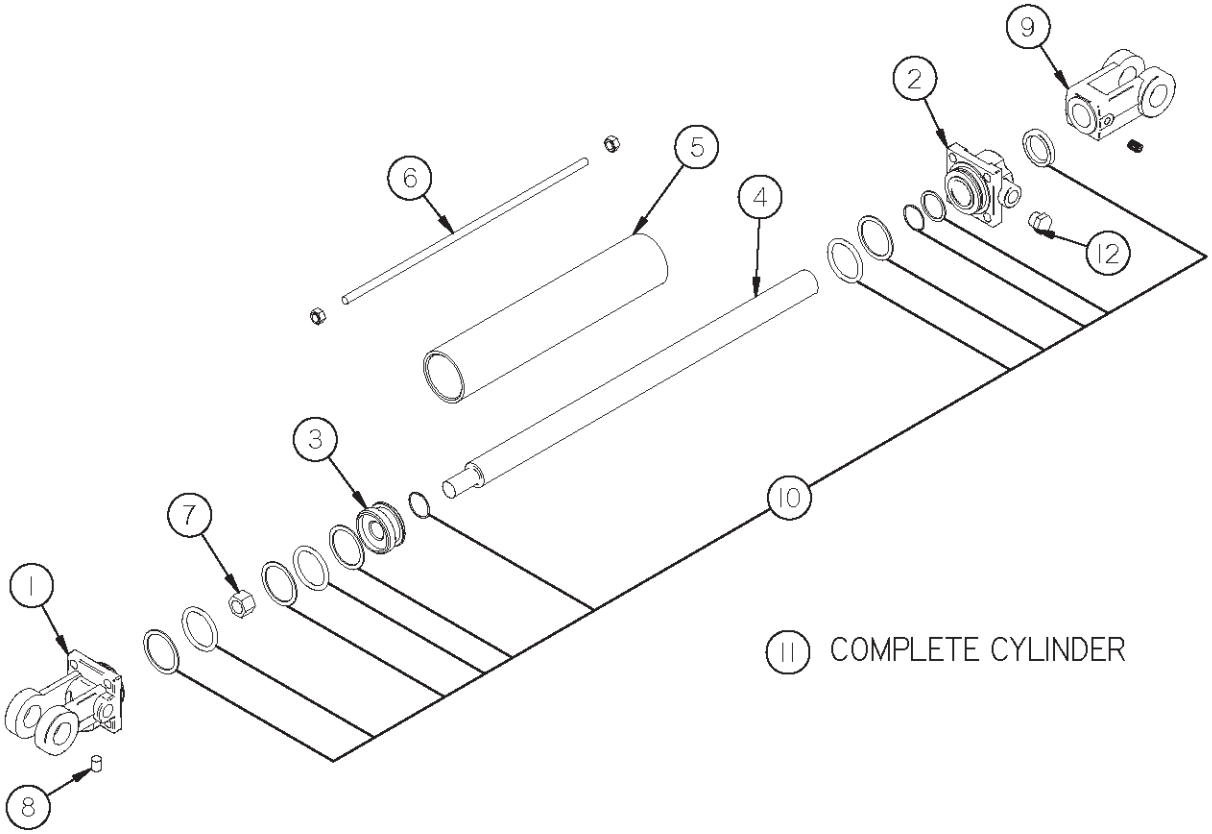

FIGURE 12

14 HI CAPACITY RAKE
HYDRAULIC LIFT CYLINDER

ITEM	PART #	DESCRIPTION
1	23N142A	CLEVIS CAP
2	56174	ROD CAP
3	56180	PISTON
4	16SV168A	ROD
5	16SV169	CYLINDER TUBE
6	16SV170	TIE ROD
7	23N148	PISTON NUT
8	23N149	PLUG
9	23N150A	ROD CLEVIS
10	56187	SEAL KIT
11	56000	COMPLETE CYLINDER
12	BFR70	VENT PLUG

FIGURE 13

14 HI CAPACITY RAKE
OPTIONAL 15” GAUGE WHEEL

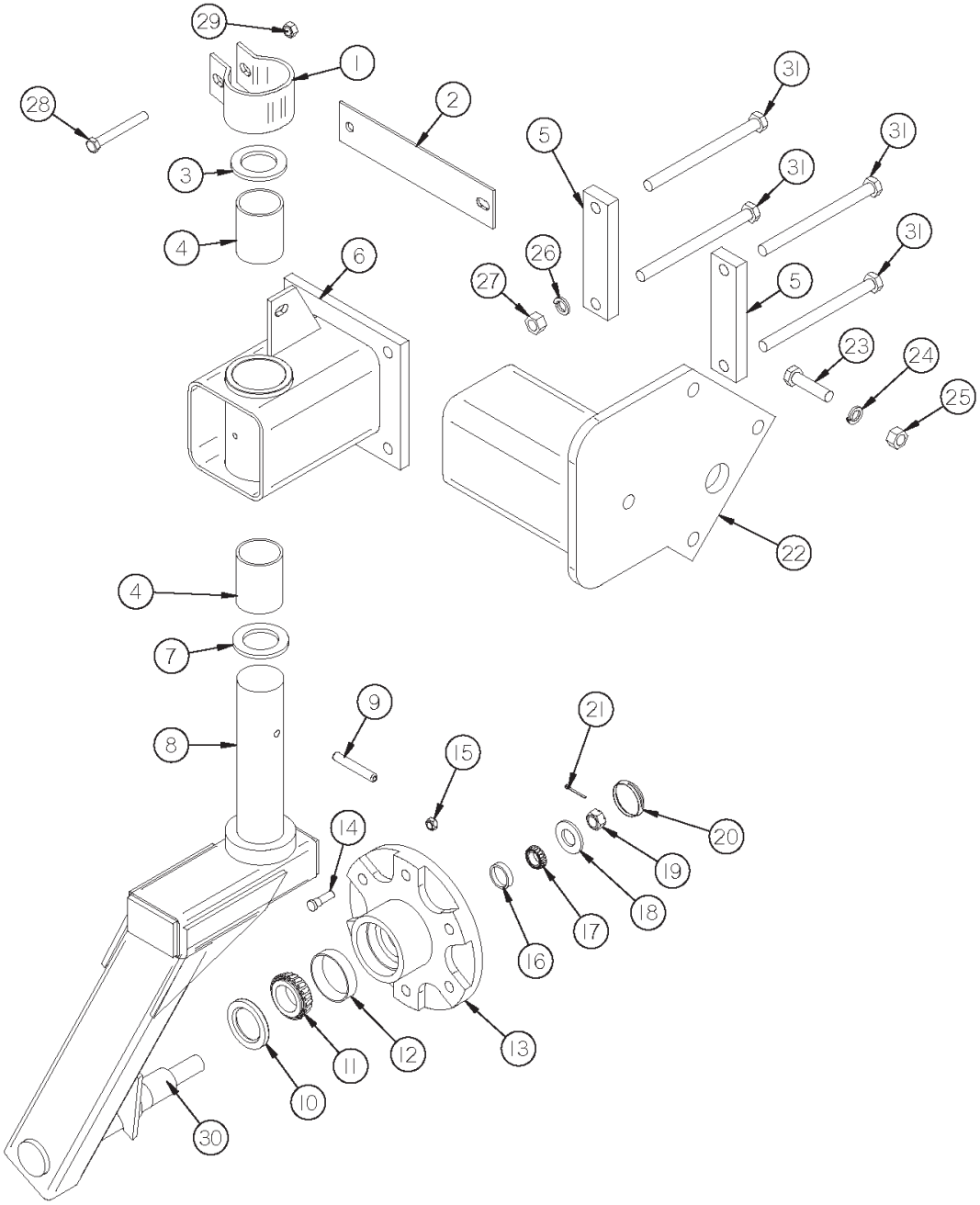

FIGURE 13

14 HI CAPACITY RAKE
OPTIONAL 15” GAUGE WHEEL

ITEM	PART #	DESCRIPTION
1	BFR311	BRAKE COLLAR
2	BFR310	BRAKE PAD (2)
3	BFR309	GAUGE WHEEL WASHER
4	RG26	BRONZE BUSHING
5	BFR725	MOUNTING STRAP
6	BFR643	GAUGE WHEEL MOUNT
7	RG24	BRONZE WASHER
8	BFR316	COMPLETE FORK LH
*	BFR312	COMPLETE FORK RH
9	YPEX10025	EXPANSION PIN, 5/16" X 2-3/4"
10	BFR57	SEAL
11	BFR58	INNER BEARING
12	BFR59	INNER RACE
13	BFR60	HUB
14	YBSD16005	STUD BOLT, 1/2"-20 UNF X 1-7/8" (3/8" SHOULDER)
15	YNWL16005	WHEEL NUT, 1/2"-20 UNF
16	BFR61	OUTER RACE
17	BFR62	OUTER BEARING
18	YWFL24010	WASHER, FLAT, SAE 3/4, PLAIN
19	YNSL24010	HEX NUT, SLOTTED, 3/4"-16
20	BFR66	HUB CAP
21	YPCT05010	COTTER PIN, 5/32" X 1-1/2"
*	BFR75	COMPLETE GROUND WHEEL HUB
22	BFR644	GAUGE WHEEL EXTENSION LEFT
*	BFR645	GAUGE WHEEL EXTENSION RIGHT
23	YBHH20025	BOLT, 5/8" X 2" GR. 5
24	YWLO20005	WASHER, LOCK, 5/8"
25	YNHX20005	HEX NUT, 5/8"-11 PLATED
26	YWLO16005	WASHER, LOCK, 1/2"
27	YNHX16005	HEX NUT, 1/2"
28	YBHH12125	BOLT, 3/8" X 3" GR. 5 FULL THREAD
29	YNHX12005	HEX NUT, 3/8"-16
30	BFR56	SPINDLE
*	BFR67	15 X 5 WHEEL
*	BFR128	6.70 X 15 TIRE
31	YBHH16175	BOLT, 1/2" X 6-1/2" GR. 5

NOTE: * MEANS NOT SHOWN

FIGURE 14

14 HI CAPACITY RAKE
14 TO 16 WHEEL EXPANSION KIT

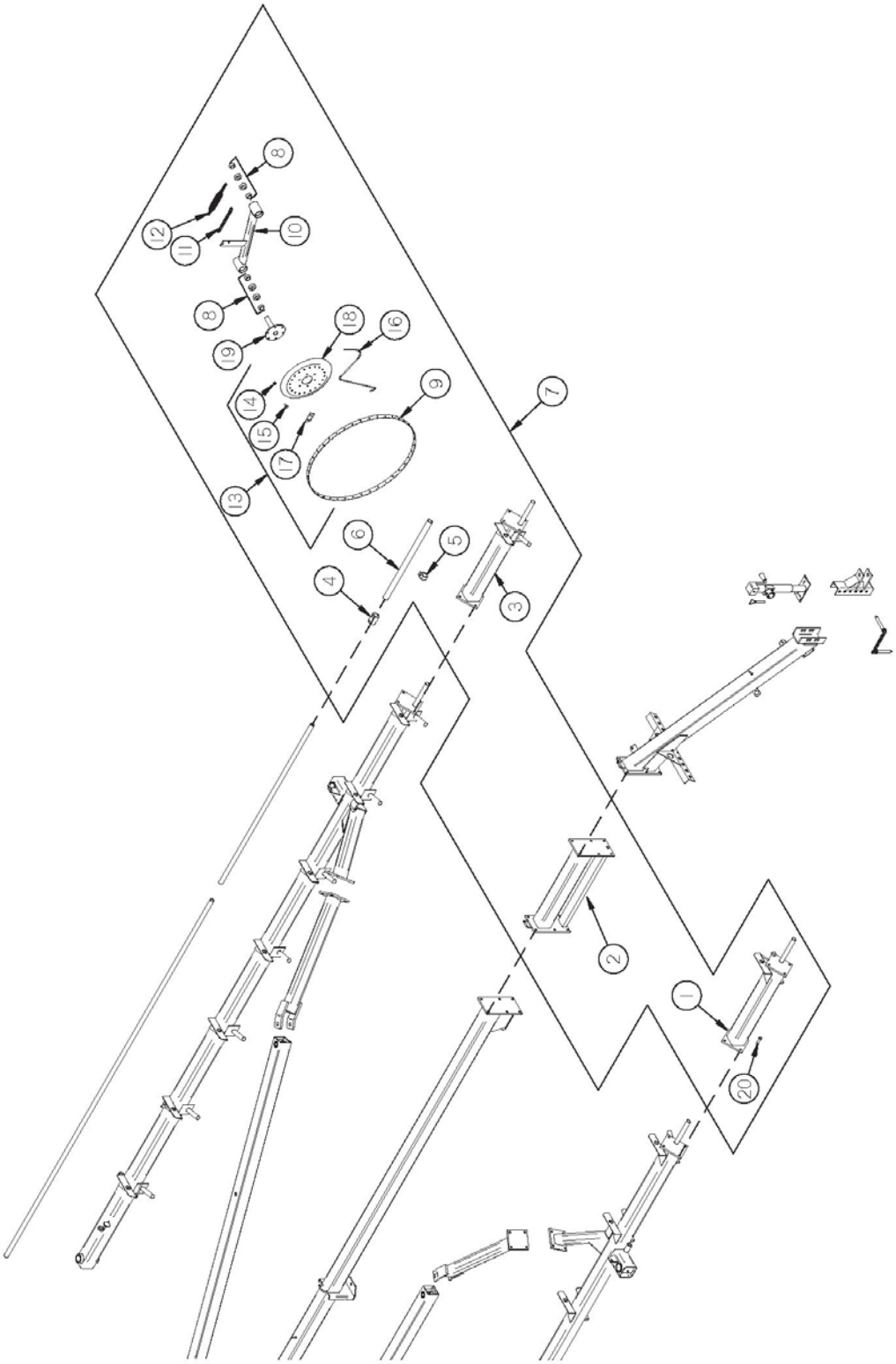

FIGURE 14

14 HI CAPACITY RAKE
14 TO 16 WHEEL EXPANSION KIT

ITEM	PARTS	DESCRIPTION
1	BFR733	RH RAKE BEAM EXTENSION
2	031WE04	POLE EXTENSION
3	BFR734	LH RAKE BEAM EXTENSION
4	BFR537	LIFTING PIPE CONNECTOR LH
5	BFR431	SPRING CLAMP
*	BFR430	RH SPRING CLAMP
6	BFR536	LIFTING PIPE EXTENSION
7	BFR535	COMPLETE EXPANSION KIT
8	BFR525	BEARING
9	T177	OUTER RING
*	BFR635	HOSE 1/2" FP X 1/2" MP X 33" (3)
10	BFR489	RAKE ARM LH
*	BFR490	RAKE ARM RH
11	BFR140	RAKE ARM ADJUSTMENT CHAIN
12	BFR138	SPRING
13	T174	RAKE WHEEL LH
*	BFR31	RAKE WHEEL RH
14	YNCL76005	10MM TOP LOCK NUT
15	YBCR76005	CARR. BOLT, 10MM X 25MM
16	T176	RAKE WHEEL TOOTH
17	T178	RAKE TOOTH CLIP
18	T179	RAKE WHEEL CENTER
19	BFR657	RAKE WHEEL HUB
20	YBHH20025	BOLT, 5/8" X 2" GR. 5

NOTE: * MEANS NOT SHOWN

FIGURE 15

12 & 14 HI CAPACITY RAKE
OPTIONAL 2 WHEEL CENTER KICKER WHEEL

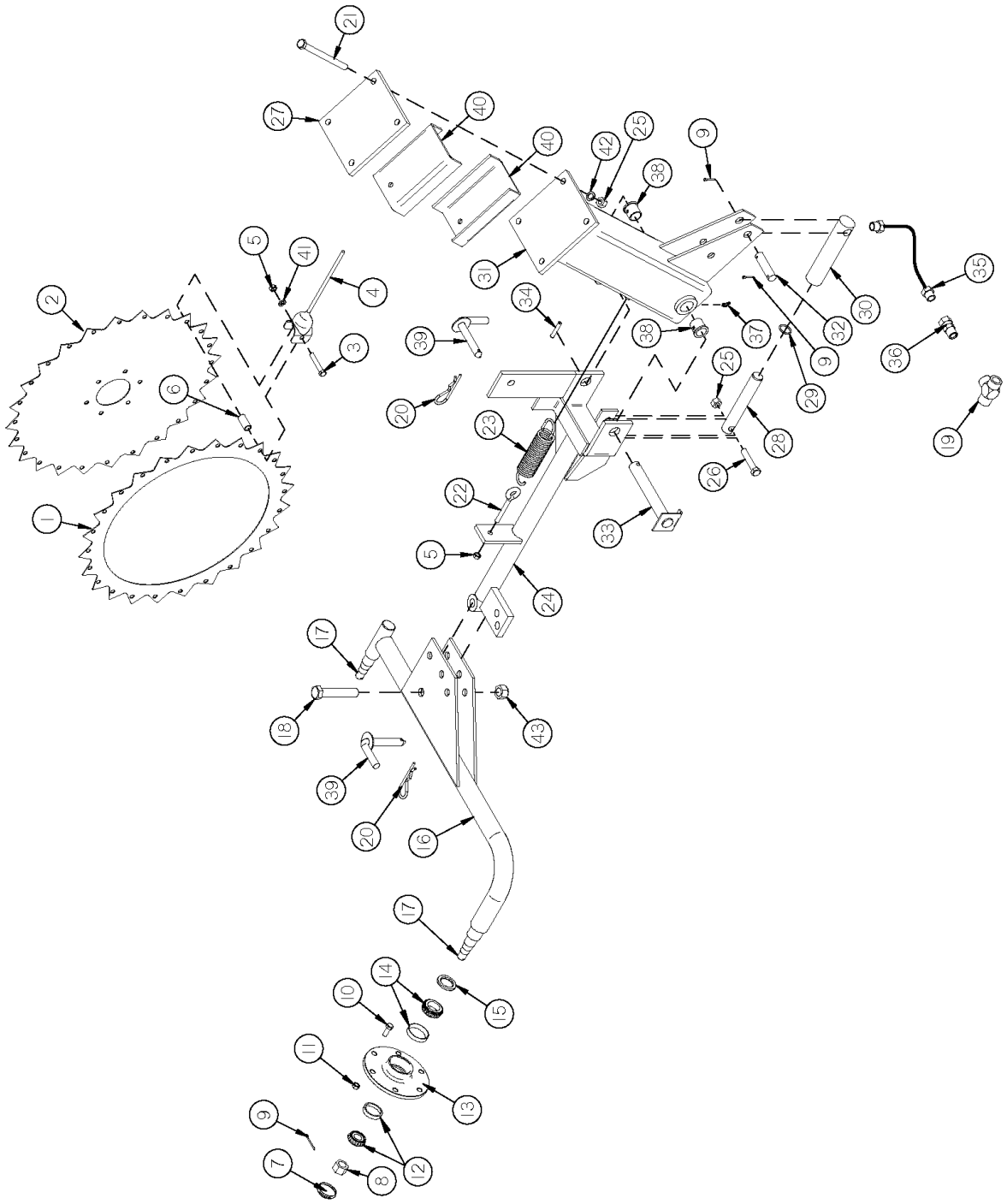

FIGURE 15
H & S 12 & 14 WHEEL HI CAPACITY RAKE
OPTIONAL 2 WHEEL CENTER KICKER WHEEL

ITEM	PART #	DESCRIPTION
1	BFR369	RAKE WHEEL RING
2	BFR370	RAKE WHEEL CENTER
*	BFR748	COMPLETE WHEEL ASSEMBLY
3	YBHH12100	BOLT, 3/8" X 2-1/4" GR. 5
4	T82	RAKE WHEEL TOOTH
5	YNTL12005	HEX NUT, TOP LOCK, 3/8"-16
6	BFR371	RAKE WHEEL SPACER
7	T173	HUB CAP
8	YNSL24010	HEX NUT, SLOTTED, 3/4"-16
9	YPCT05010	COTTER PIN, 5/32" X 1-1/2"
10	YBHH76005	BOLT, 10MM X 25MM
11	YNHX76015	HEX NUT, 10MM
12	600014	OUTER BEARING RACE
13	BFR32	RAKE WHEEL HUB
14	600012	INNER BEARING RACE
15	T163	SEAL
*	BFR76	COMPLETE HUB
16	BFR511	CENTER KICKER WHEEL ARM
17	BFR36	SPINDLE
18	YBHH24050	BOLT, 3/4" X 3" GR. 5
19	BFR74	3/8" PIPE TEE
20	YPHR02010	HAIR PIN, #21-07
21	YBHH16175	BOLT, 1/2" X 6-1/2" GR. 5
22	YBTE12025	TURNED EYE BOLT, 3/8" X 3" FULL THREAD
23	BR62	SPRING
24	BFR512	CENTER KICKER WHEEL PIVOT
25	YNTL16005	HEX NUT, TOP LOCK, 1/2"-13
26	YBHH16080	BOLT, 1/2" X 2-1/2" GR. 5
27	BFR513	KICKER WHEEL MOUNT
28	BFR114	PISTON
29	BFR115	O-RING
30	BFR116	HYDRAULIC CYLINDER
31	BFR514	KICKER WHEEL OFFSET
32	BFR515	CYLINDER PIN
33	BFR379	AXLE SHAFT
34	YPEX10015	EXPANSION PIN, 5/16" X 1-3/4"
35	BFR121	HOSE
36	58720	3/8 MALE ADPTER WITH .022 ORIFICE
37	RG21	GREASE ZERK, 45 DEGREE
38	BFR27	BUSHING
39	BFR197	LOCKING PIN
40	BFR516	FILLER PLATE
41	YWLO12005	WASHER, LOCK, 3/8"
42	YWLO16005	WASHER, LOCK, 1/2"
43	YNTL24005	HEX NUT, TOP LOCK, 3/4"-10

NOTE: * MEANS NOT SHOWN

FIGURE 16

12 & 14 HI CAPACITY RAKE
OPTIONAL 3 WHEEL CENTER KICKER WHEEL

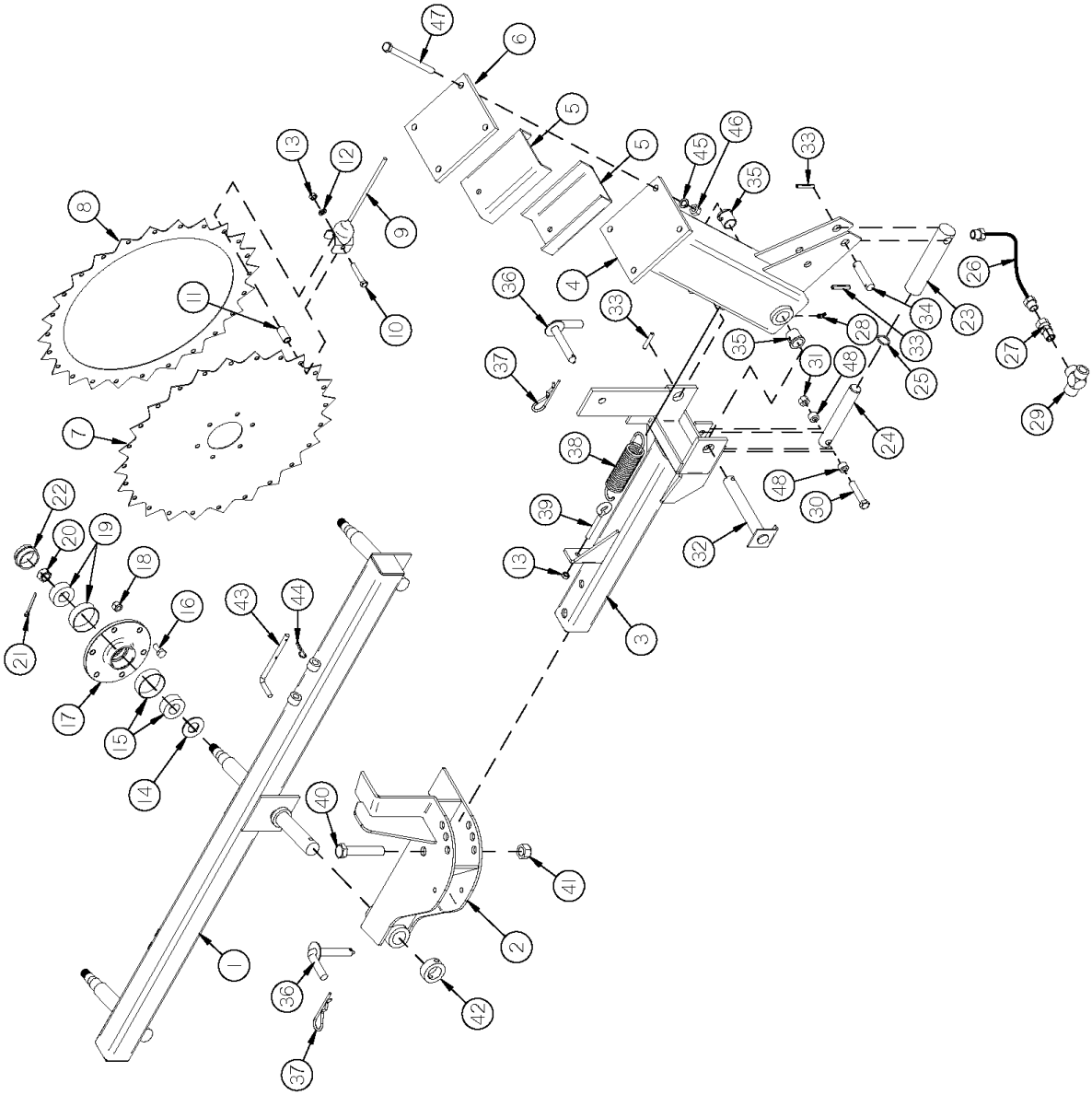

FIGURE 16
H&S 12 & 14 WHEEL HI CAPACITY RAKE
OPTIONAL 3 WHEEL CENTER KICKER WHEEL

ITEM	PART #	DESCRIPTION
1	BFR717	KICKER RAKE BEAM
2	BFR718	PIVOT
3	BFR719	SQUARE RAKE ARM
4	BFR514	KICKER WHEEL OFFSET
5	BFR516	FILLER PLATE
6	BFR513	KICKER WHEEL MOUNT
7	BFR370	RAKE WHEEL CENTER
8	BFR369	RAKE WHEEL RING
9	T82	RAKE WHEEL TOOTH
*	BFR748	COMPLETE WHEEL ASSEMBLY
10	YBHH12100	BOLT, 3/8" X 2-1/4" GR. 5
11	BFR371	RAKE WHEEL SPACER
12	YWLO12005	WASHER, LOCK, 3/8"
13	YNTL12005	HEX NUT, TOP LOCK, 3/8"-16
14	T163	SEAL
15	600012	INNER BEARING RACE
16	YBHH76005	BOLT, 10MM X 25MM
17	BFR32	RAKE WHEEL HUB
*	BFR76	COMPLETE HUB
18	YNHX76015	HEX NUT, 10MM
19	600014	OUTER BEARING RACE
20	YNSL24010	HEX NUT, SLOTTED, 3/4"-16
21	YPCT05010	COTTER PIN, 5/32" X 1-1/2"
22	T173	HUB CAP
23	BFR116	HYDRAULIC CYLINDER
24	BFR114	PISTON
25	BFR115	O-RING
26	BFR121	HOSE
27	58720	3/8 MALE ADPTER WITH .022 ORIFICE
28	RG21	GREASE ZERK, 45 DEGREE
29	BFR74	3/8" PIPE TEE
30	YBHH16115	BOLT, 1/2" X 3-1/2" GR. 5
31	YNTL16005	HEX NUT, TOP LOCK, 1/2"-13
32	BFR379	AXLE SHAFT
33	YPEX10015	EXPANSION PIN, 5/16" X 1-3/4"
34	BFR515	CYLINDER PIN
35	BFR27	BUSHING
36	BFR197	LOCKING PIN
37	YPHR02010	HAIR PIN, #21-07
38	BR62	SPRING
39	YBTE12025	TURNED EYE BOLT, 3/8" X 3" FULL THREAD
40	YBHH24070	BOLT, 3/4-10" X 4" GR. 5
41	YNTL24005	HEX NUT, TOP LOCK, 3/4"-10
42	BFR720	PIVOT LOCK COLLAR
43	BFR721	BEAM LOCK PIN
44	YPHR02005	HAIR PIN, #21-05 (1-7/8" LONG, 3/8-7/16" SHAFT)
45	YWLO16005	WASHER, LOCK, 1/2"
46	YNTL16005	HEX NUT, TOP LOCK, 1/2"-13
47	YBHH16175	BOLT, 1/2" X 6-1/2" GR. 5
48	BFR722	LIFT CYLINDER SPACER

NOTE: * MEANS NOT SHOWN

FIGURE 17

12 & 14 HI CAPACITY RAKE OPTIONAL LIGHTS

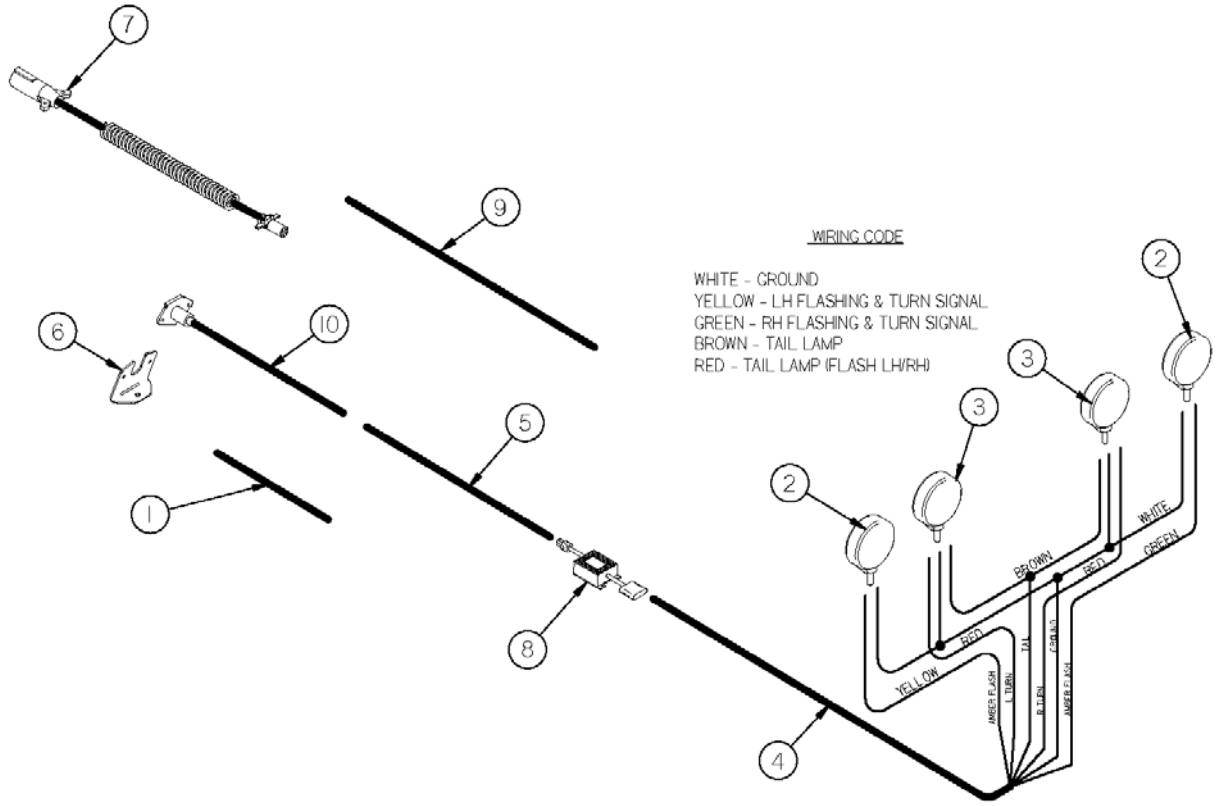

ITEM	PART #	DESCRIPTION
1	BFR666	16 WHEEL EXT. LIGHT HARNESS
2	DWM129	AMBER LIGHT
3	BFR675	RED LIGHT
4	BFR667	LIGHT HARNESS (6 WIRE)
5	BFR705	14 WHEEL LIGHT HARNESS
6	BFR659	MOUNTING BRACKET
7	TLPC	TRACTOR CORD (OPTIONAL)
8	69908	LIGHT MODULE
9	BFR668	12 WHEEL LIGHT HARNESS
10	BFR706	FRONT PIGTAIL
*	BFR671	12 WHEEL COMP. LIGHT HARNESS LESS OPTIONAL CORD
*	BFR707	14 WHEEL COMP. LIGHT HARNESS LESS OPTIONAL CORD
*	BFR708	16 WHEEL COMP. LIGHT HARNESS LESS OPTIONAL CORD

NOTE: * MEANS NOT SHOWN

FIGURE 18
12 & 14 HI CAPACITY RAKE
OPTIONAL WIND GUARD KIT

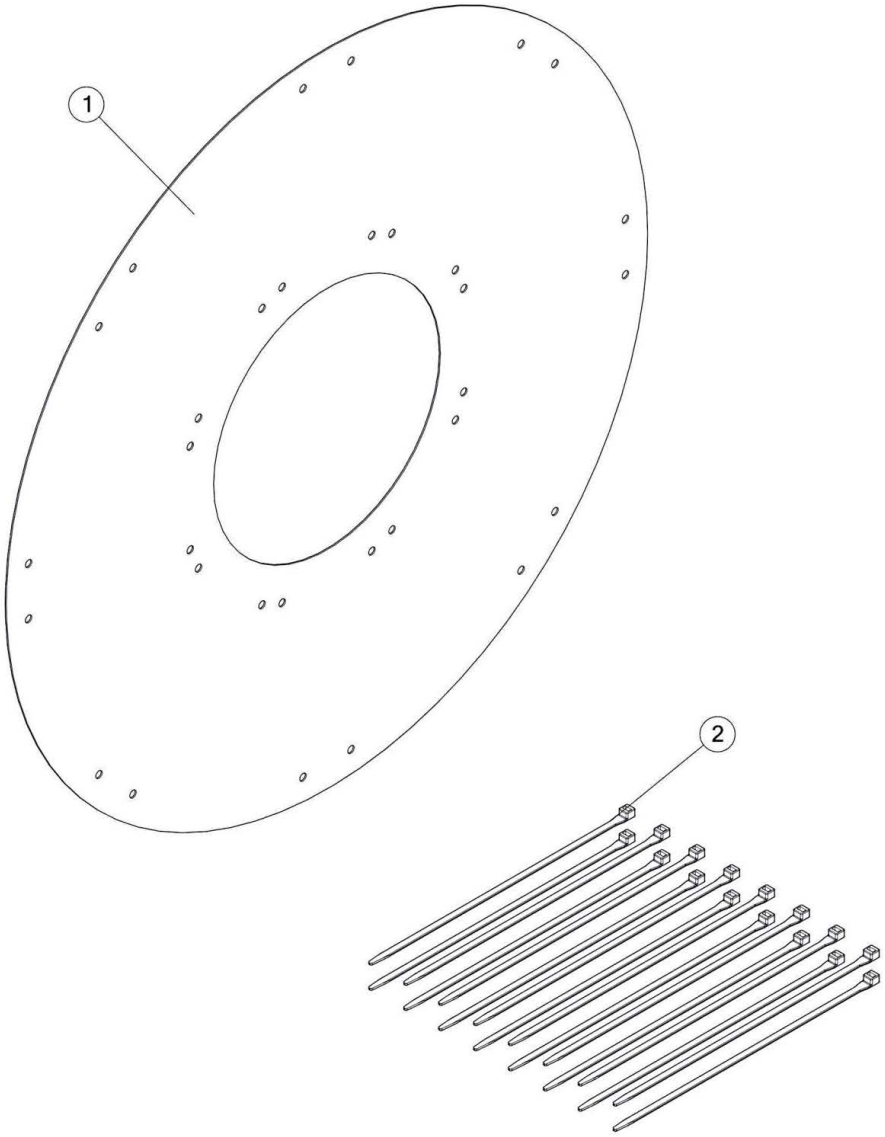

FIGURE 18
12 & 14 HI CAPACITY RAKE
OPTIONAL WIND GUARD KIT

ITEM	PART #	DESCRIPTION
1	59039	POLY WIND GAURD, FOR 55" RAKE WHEEL
2	57626	15 INCH 120# BLACK CABLE TIE

H&S MFG. CO.

products approved

for the

FEMA

SEAL OF QUALITY

SEAL OF QUALITY

FEMA

FARM EQUIPMENT MANUFACTURERS ASSOCIATION