H&S PARTS BOOK

HC7116
RAKE

Revision #00
Starting Ser. #911HCD6001 HSMFG0519 PART #82875

Manufactured By
H&S MANUFACTURING CO.,INC.
2608 S. HUME AVE. MARSHFIELD, WI 54449
(715) 387-3414 FAX (715) 384-8736

CONTENTS

Instructions for Ordering Parts 1
Figure 1 - Front Pole and Components. 2-3
Figure 2 - Transport Lock and Components. 4-5
Figure 3 - Center Pole and Slider. 6-7
Figure 4 - Main Frame Rear and Uprights 8-9
Figure 5 - Tandems and Tires. 10-11
Figure 6 - Linkage Arms and Components. 12-13
Figure 7 - Main Rake Beam Arm RH and Components 14-15
Figure 8 - Main Rake Beam Arm LH and Components. 16-17
Figure 9 - Front Caster and Components. 18-19
Figure 10 - Rake Wheel Components. 20-21
Figure 11 - Hydraulics and Components. 22-23
Figure 12 - Open Cylinder. 24-25
Figure 13 - Lift Cylinder 26-27
Figure 14 - Optional Hydraulic Rear Opening Cylinder. 28-29
Figure 15 - 2 Wheel Extension Option 30-31
Figure 16 - Caster and Component Options. 32-33
Parts Notes 34

INSTRUCTIONS FOR ORDERING PARTS

All service parts should be ordered through your authorized H&S dealer.He will be able to give you faster service if you will provide them with the following:

1. Model & Serial Number - Both can be located on the side of the center bearing post above jack mount.

2. All references to left or right apply to the machine as viewed from the rear.

3. Parts should not be ordered from illustration only. Please order complete part number.

4. If your dealer has to order parts - give shipping instructions:

   VIA truck - large pieces (please specify local truck lines)

   VIA United Parcel Service (include full address)

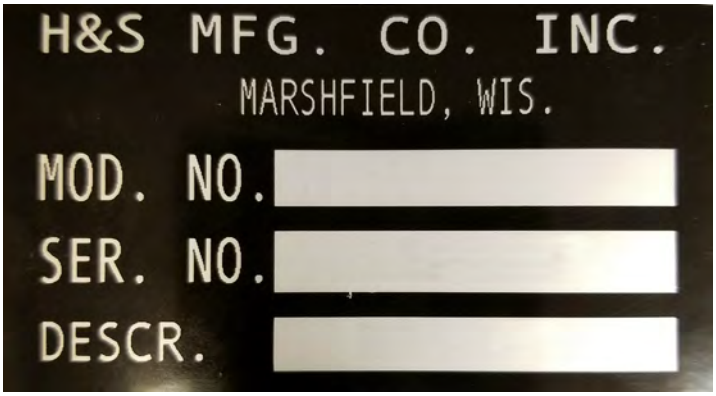

PLEASE RECORD NUMBERS FOR YOUR UNIT FOR QUICK REFERENCE

ABOUT IMPROVEMENTS

H&S IS CONTINUALLY STRIVING TO IMPROVE IT'S PRODUCTS

We must therefore, reserve the right to make improvements or changes whenever it becomes practical to do so, without incurring any obligation to make changes or additions to the equipment previously sold.

FIGURE 1
FRONT POLE & COMPONENTS

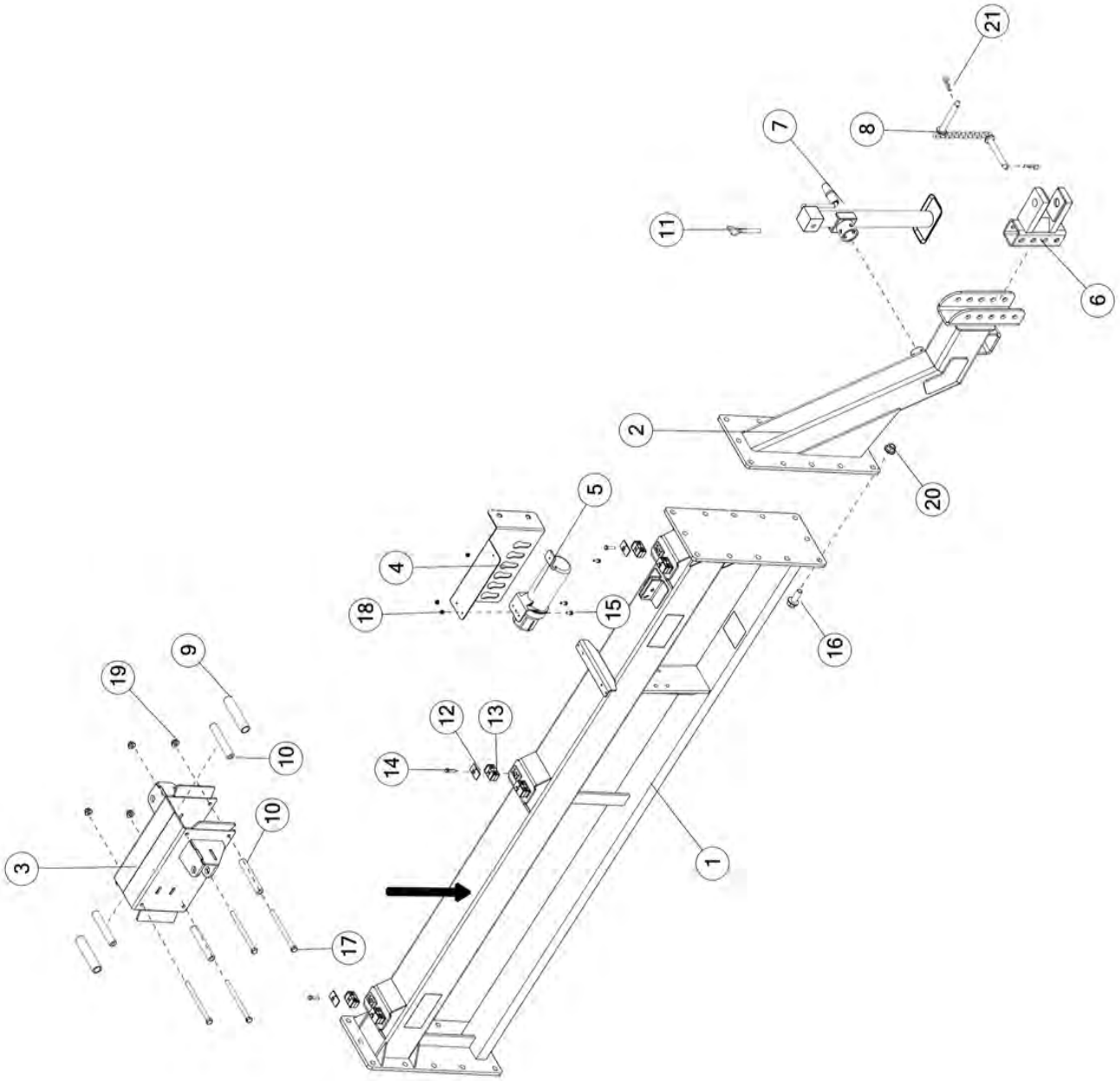

FIGURE 1
FRONT POLE & COMPONENTS

ITEM	QTY	PART#	DESCRIPTION
1	1	81145	FRONT POLE, WITH DECALS
2	1	81030	HITCH
3	1	81039	FRONT LINKAGE SLIDER
4	1	60269	HOSE HOLDER
5	1	S522	MANUAL HOLDER
6	1	HD83	HITCH CLEVIS ASSY.
7	1	BFR753A	JACK
8	1	BFR450	HITCH PIN ASSY.
9	2	58297	BACK SLIDER ROLLER
10	4	58298	SLIDER SPACER
11	1	12N117	PIN
12	6	56563	CLAMP TOP PLATE
13	6	TS118	LINE CLAMP BLOCK
14	6	56568	CLAMP BOLT 5/16 x 1-3/8
15	3	YBFB08075	BOLT FLANGE, 1/4 X 3/4 G5
16	12	YBFB24200	BOLT FLANGE, 3/4 X 2 G5
17	4	YBHH16184	BOLT, 1/2 X 7-1/2 G5
18	3	YNFG08010	NUT FLANGE, 1/4
19	4	YNFG16003	NUT FLANGE, 1/2
20	12	YNFG24006	NUT HEX TOP LOCK, 3/4
21	2	YPHR02010	HAIR PIN

FIGURE 2
TRANSPORT LOCK & COMPONENTS

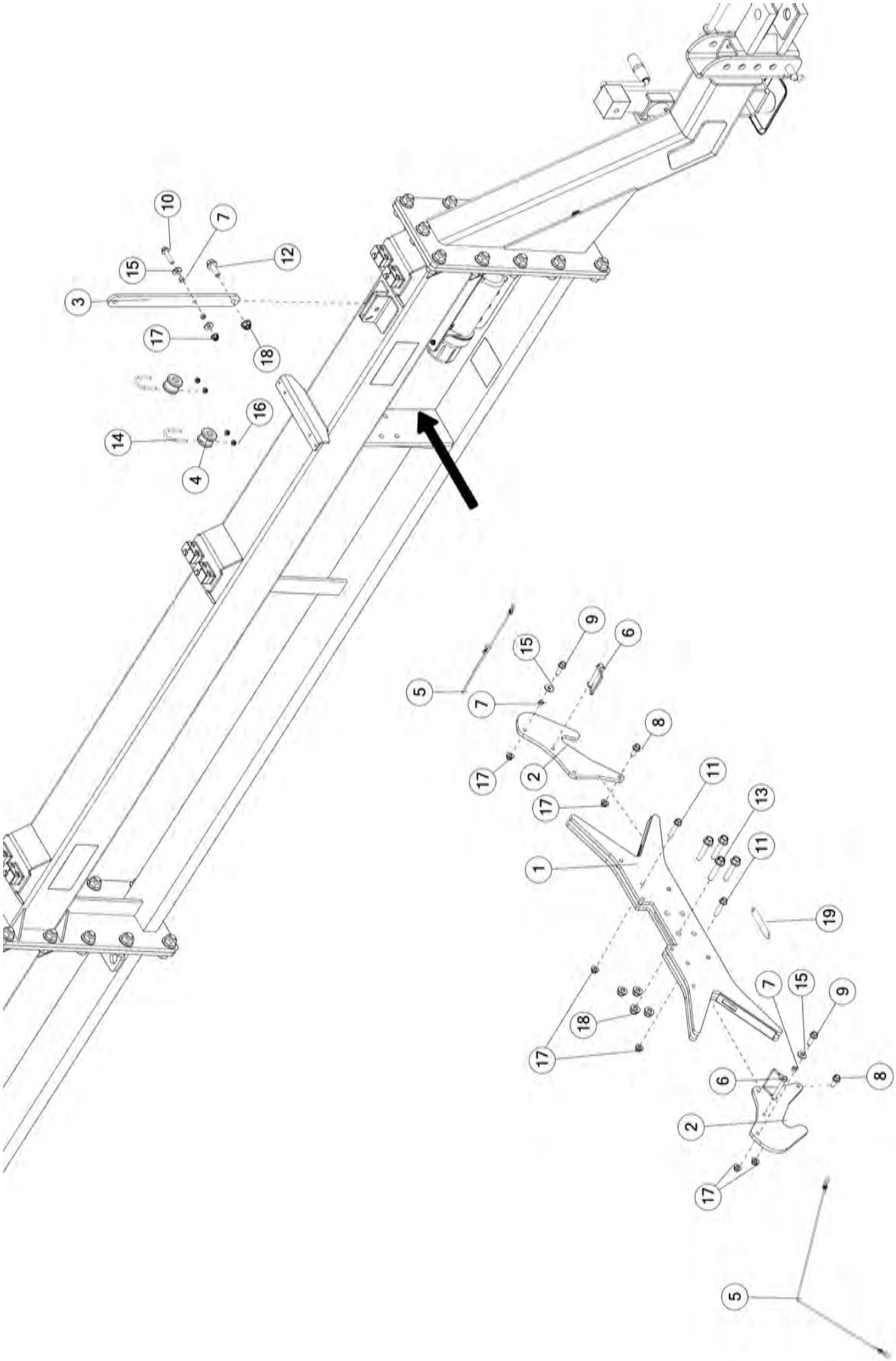

FIGURE 2
TRANSPORT LOCK & COMPONENTS

ITEM	QTY	PART#	DESCRIPTION
1	1	81111	LATCH
2	2	81094	AUTO LATCH
3	1	81121	AUTO LATCH LEVER
4	2	F33	SIDE CABLE GUIDE
5	2	85159	AUTO LATCH CABLE
6	2	DWM191	SNAPPER PIN
7	4	82102	SPACER
8	2	YBFB12003	BOLT FLANGE, 3/8 X 1 G5
9	2	YBFB12125	BOLT FLANGE, 3/8 X 1-1/4 G5
10	1	YBFB12175	BOLT FLANGE, 3/8 X 1-3/4 G5
11	2	YBFB12200	BOLT FLANGE, 3/8 X 2 G5
12	1	YBFB16150	BOLT FLANGE, 1/2 X 1-1/2 G5
13	4	YBFB16250	BOLT FLANGE, 1/2 X 2-1/2 G5
14	2	YBPU08005	PIPE U BOLT, 1/4 X 3/4
15	4	YWFL12005	WASHER FLAT, 3/8 USS
16	4	YNFG08010	NUT FLANGE, 1/4
17	7	YNFG12006	NUT FLANGE, 3/8
18	5	YNFG16003	NUT FLANGE, 1/2
19	1	81220	EXTENSION SPRING
*	1	82906	ROPE

FIGURE 3
CENTER POLE & SLIDER

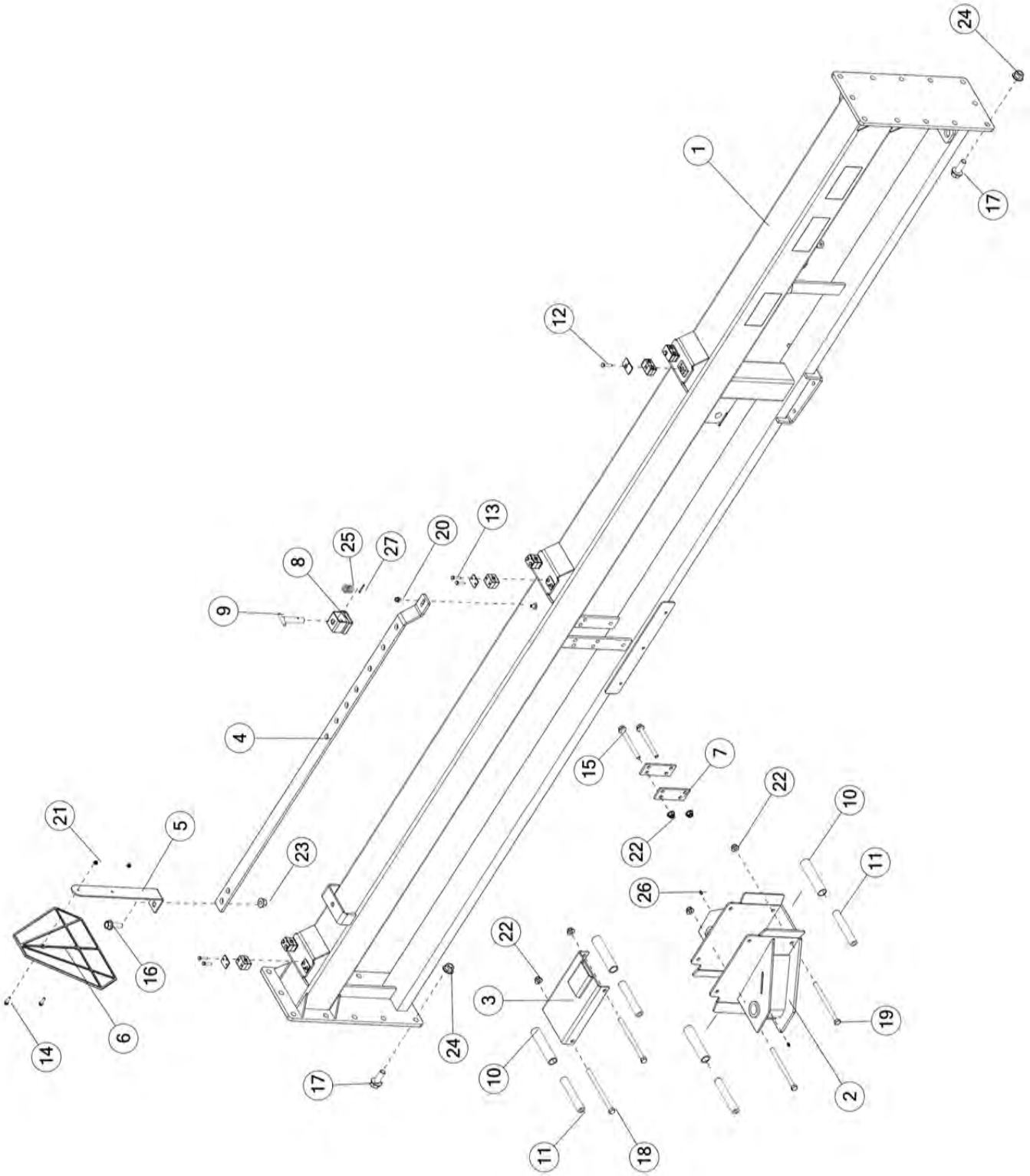

FIGURE 3
CENTER POLE & SLIDER

ITEM	QTY	PART#	DESCRIPTION
1	1	80924	POLE
2	1	81056	BACK LINKAGE SLIDER
3	1	81192	WIDTH ADJUSTMENT STOP
4	1	67416	WIDTH ADJUSTMENT BAR
5	1	63408	SMV BRACKET
6	1	BFR723	SMV SIGN
7	2	58692	SPACER
8	1	BFR239	SLEEVE LOCK ADJUSTMENT
9	1	BFR241	ADJUSTMENT HANDLE
10	4	58297	SLIDER ROLLER BACK
11	4	58298	SLIDER SPACER
12	2	56568	CLAMP BOLT, 5/16 X 1-3/8
13	4	56570	CLAMP BOLT, 1/4 X 1-1/4
14	2	YBFB08100	BOLT FLANGE, 1/4 X 1 G5
15	2	YBFB16550	BOLT FLANGE, 1/2 X 5-1/2 G5
16	1	YBFB20200	BOLT FLANGE, 5/8 X 2 G5
17	12	YBFB24200	BOLT FLANGE, 3/4 X 2 G5
18	2	YBHH16182	BOLT HEX, 1/2 X 8 G5
19	2	YBHH16184	BOLT HEX, 1/2 X 7-1/2 G5
20	1	YBFB10002	BOLT FLANGE, 5/16 X 1/2 G5
21	2	YNFG08010	NUT FLANGE, 1/4
22	4	YNFG16003	NUT FLANGE, 1/2
23	1	YNFG20005	NUT FLANGE, 5/8 LKTL
24	12	YNFG24006	NUT HEX FLANGE TOP LOCK, 3/4
25	1	BFR240	SPRING
26	2	G89	GREASE ZERK, 1/4
27	1	YPCT05005	COTTER PIN, 5/32 X 1

FIGURE 4
MAIN FRAME REAR & UPRIGHTS

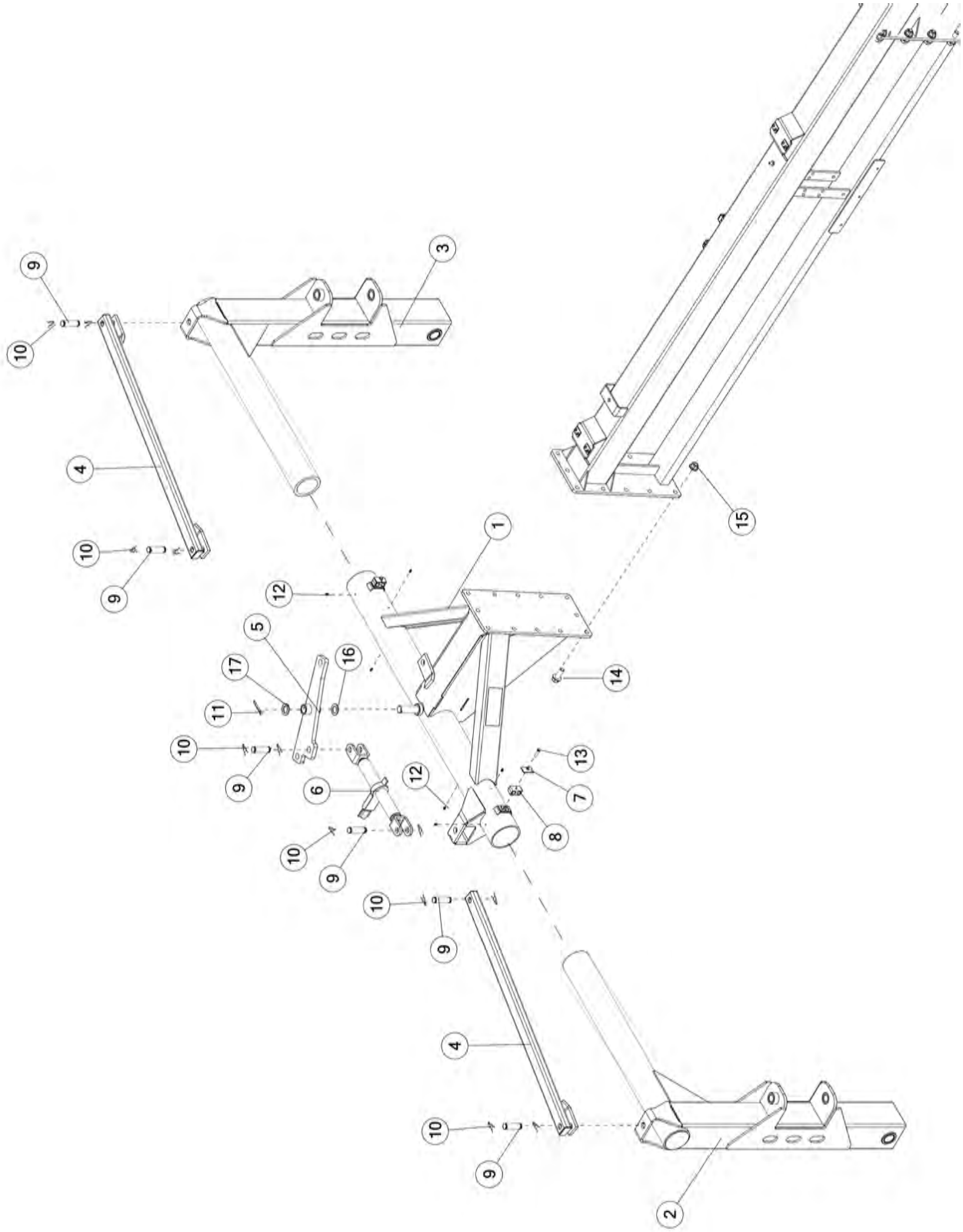

FIGURE 4
MAIN FRAME REAR & UPRIGHTS

ITEM	QTY	PART#	DESCRIPTION
1	1	82677	FRAME REAR
2	1	82674	UPRIGHT RH
3	1	82683	UPRIGHT LH
4	2	FR9	CYLINDER LINK
5	1	HD8	CAM ARM
6	1	T138	RATCHET JACK W/ HANDLE
7	2	56563	CLAMP PLATE TOP
8	2	CHM278	TWO LINE CLAMP BLOCK 3/8
9	6	T143	HYD CYLINDER PIN
10	12	53371	CYLINDER PIN
11	1	YPCT08010	COTTER PIN, 1/4 X 2-1/2
12	6	G89	ZERK 1/4-28
13	2	56568	CLAMP BOLT 5/16 x 1-3/8
14	12	YBFB24200	BOLT FLANGE, 3/4 X 2 G5
15	12	YNFG24006	NUT HEX FLANGE, TOP LOCK, 3/4
16	1	70877	SHIM
17	1	BFR229	SHIM

FIGURE 5
TANDEMS & TIRES

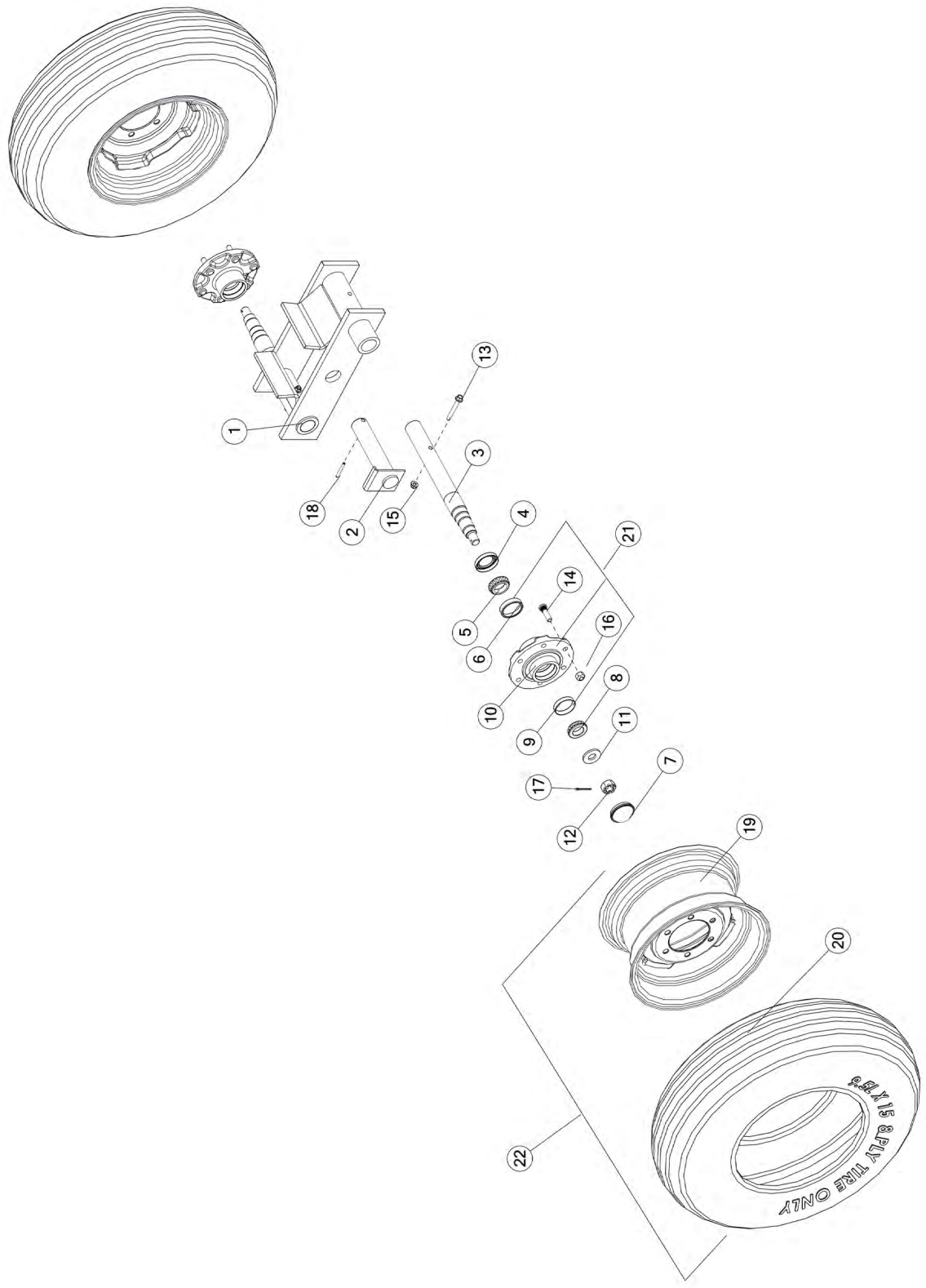

FIGURE 5
TANDEMS & TIRES

ITEM	QTY	PART#	DESCRIPTION
1	1	58299	TANDEM RH
*	1	58300	TANDEM LH
2	2	58277	AXLE PIVOT PIN
3	4	FR55	SPINDLE
4	4	12N17	HUB
5	4	12N18	TAPER BEARING
6	4	12N19	INNER RACE
7	4	17G144	HUB CAP
8	4	17G145	ROLLER BEARING
9	4	17G146	OUTER RACE
10	4	58401	HUB
11	4	HD200	ROAD WHEEL SPINDLE WASHER
12	4	YNSL28005	NUT SLOT, 7/8 G2
13	4	YBFB12300	BOLT FLANGE, 3/8 X 3 G5
14	48	YBSD16005	BOLT STUD, 1/2 X 1-7/8 G5
15	4	YNFG12006	NUT FLANGE, 3/8
16	48	YNWL16005	NUT WHEEL, 1/2 G5
17	4	YPCT05010	COTTER PIN, 5/32 X 1-1/2
18	2	YPEX12022	EXPANSION PIN, 3/8 X 2-3/8
19	4	12N24	WHEEL, 15 X 8
20	4	UR1A	TIRE 9.5L X 15
21	4	RG101	HUB W/RACES AND STUDS
22	4	33511	TIRE 9.5L X 15

***MEANS NOT SHOWN**

FIGURE 6
LINKAGE ARMS & COMPONENTS

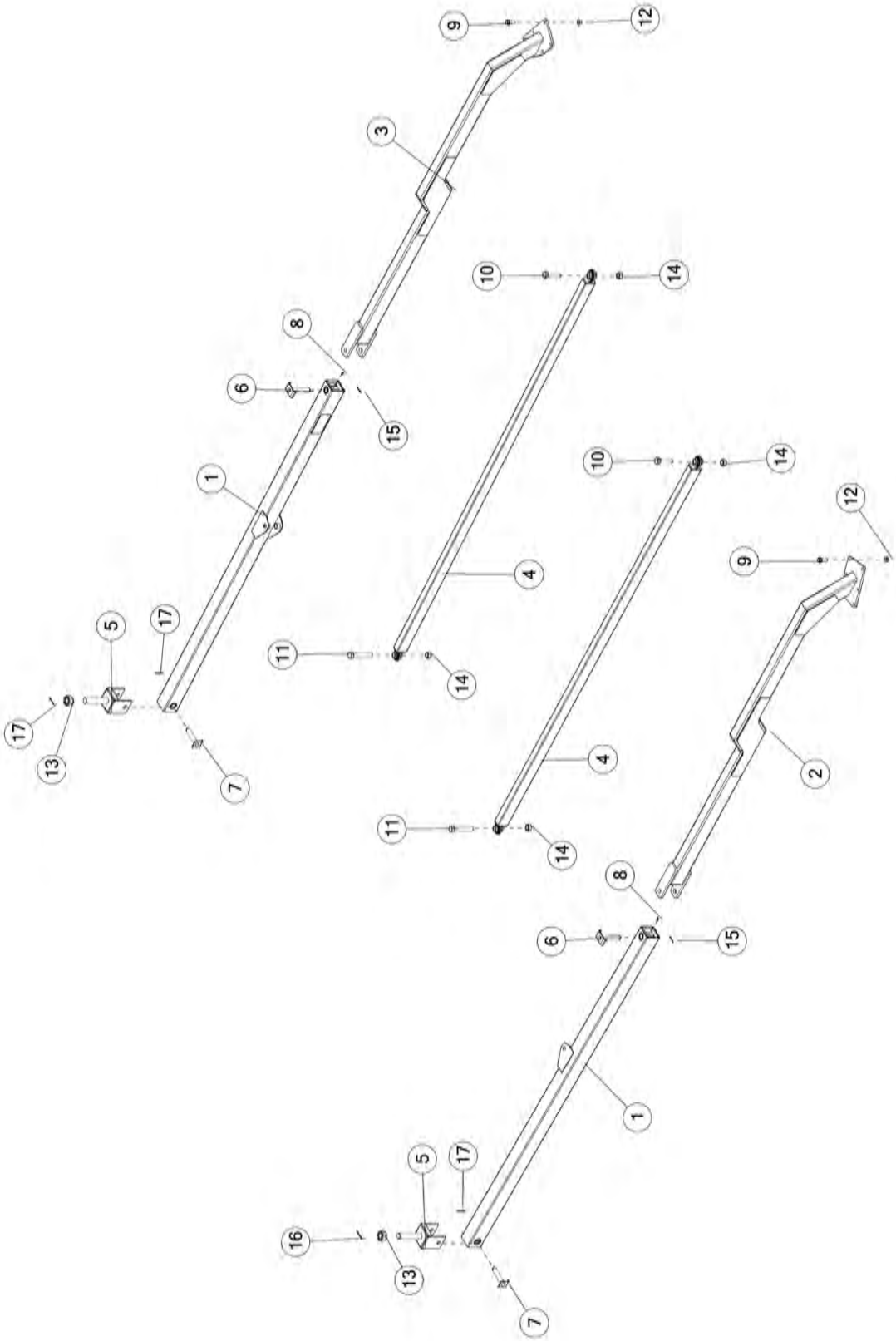

FIGURE 6
LINKAGE ARMS & COMPONENTS

ITEM	QTY	PART#	DESCRIPTION
1	2	82314	LINKAGE REAR
2	1	82216	LINKAGE FRONT RH
3	1	82286	LINKAGE FRONT LH
4	2	BFR458	LINKAGE FRONT
5	2	BFR476	LINKAGE YOKE BACK
6	2	BFR461	RAKE BEAM ARM PIN
7	2	BFR479	PIVOT YOKE SHAFT PIN
8	2	RG21	ZERK
9	12	YBFB20200	BOLT FLANGE, 5/8 X 2 G5
10	2	YBHH32015	BOLT, 1 X 4 G5
11	2	YBHH32025	BOLT, 1 X 6 G5
12	12	YNFG20005	NUT FLANGE, 5/8 LKTL
13	2	YNSL40005	NUT SLOT, 1-1/2 G2
14	4	YNTL32005	NUT HEX, 1 LKTL
15	2	YPCT05010	COTTER PIN, 5/32 X 1-1/2
16	2	YPCT05035	COTTER PIN, 5/32 X 2-1/2
17	2	YPCT06020	COTTER PIN, 3/16 X 2

FIGURE 7
MAIN RAKE BEAM ARM RH & COMPONENTS

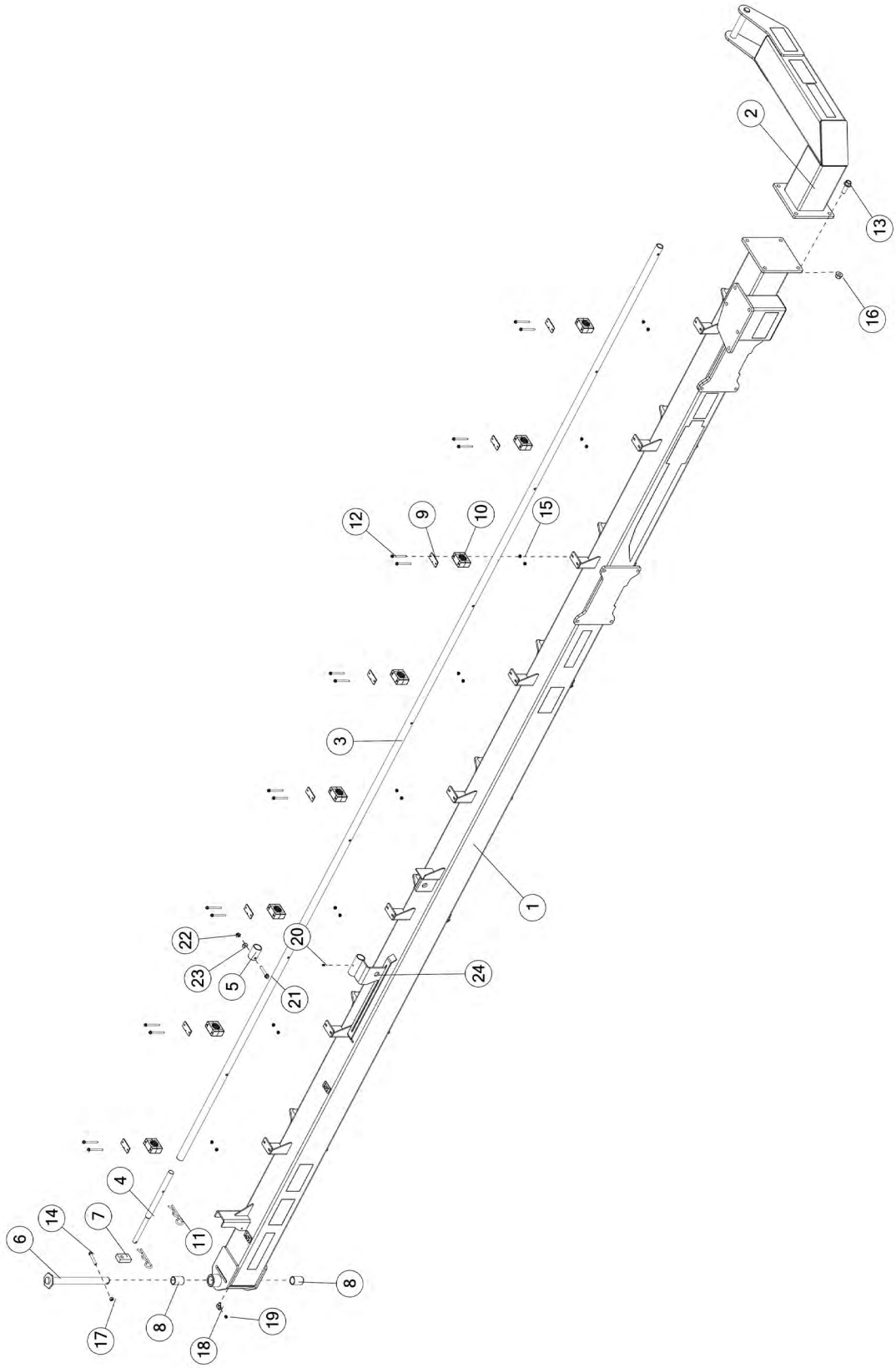

FIGURE 7
MAIN RAKE BEAM ARM RH & COMPONENTS

ITEM	QTY	PART#	DESCRIPTION
1	1	82697	BACK BEAM RH
2	1	82282	BEAM STANDOFF RH
3	1	81151	LIFTING PIPE, RH
4	1	81286	RAKE ARM LOCK-UP SHAFT
5	1	HD175	LIFTING PIPE COLLAR
6	1	FR10	U JOINT PIN
7	1	64103	RAKE PRESSURE HANDLE
8	2	RG132	BUSHING
9	8	56566	HOSE CLAMP COVER
10	8	69113	HOSE CLAMP CUSION
11	2	YPHR08040	HAIR PIN
12	16	YBFB08300	BOLT FLANGE, 1/4 X 3 G5
13	4	YBFB20200	BOLT FLANGE, 5/8 X 2 G5
14	1	YBHH12090	BOLT, 3/8 X 2-1/2 G5
15	16	YNFG08010	NUT FLANGE, 1/4
16	4	YNFG20005	NUT FLANGE, 5/8 LKTL
17	2	YNTL12005	NUT HEX, 3/8 LKTL
18	1	58453	ELBOW
19	1	BFR28	GREASE ZERK 1/8
20	1	MS26	SHORT SHANK ZERK (STRAIGHT)
21	1	YBFB12250	BOLT FLANGE, 3/8 X 2-1/2 G5
22	1	YNFG12006	NUT FLANGE, 3/8
23	1	YWFL12005	WASHER FLAT, 3/8
24	1	81149	LIFTING PIPE CYL MOUNT RH

FIGURE 8
MAIN RAKE BEAM ARM LH & COMPONENTS

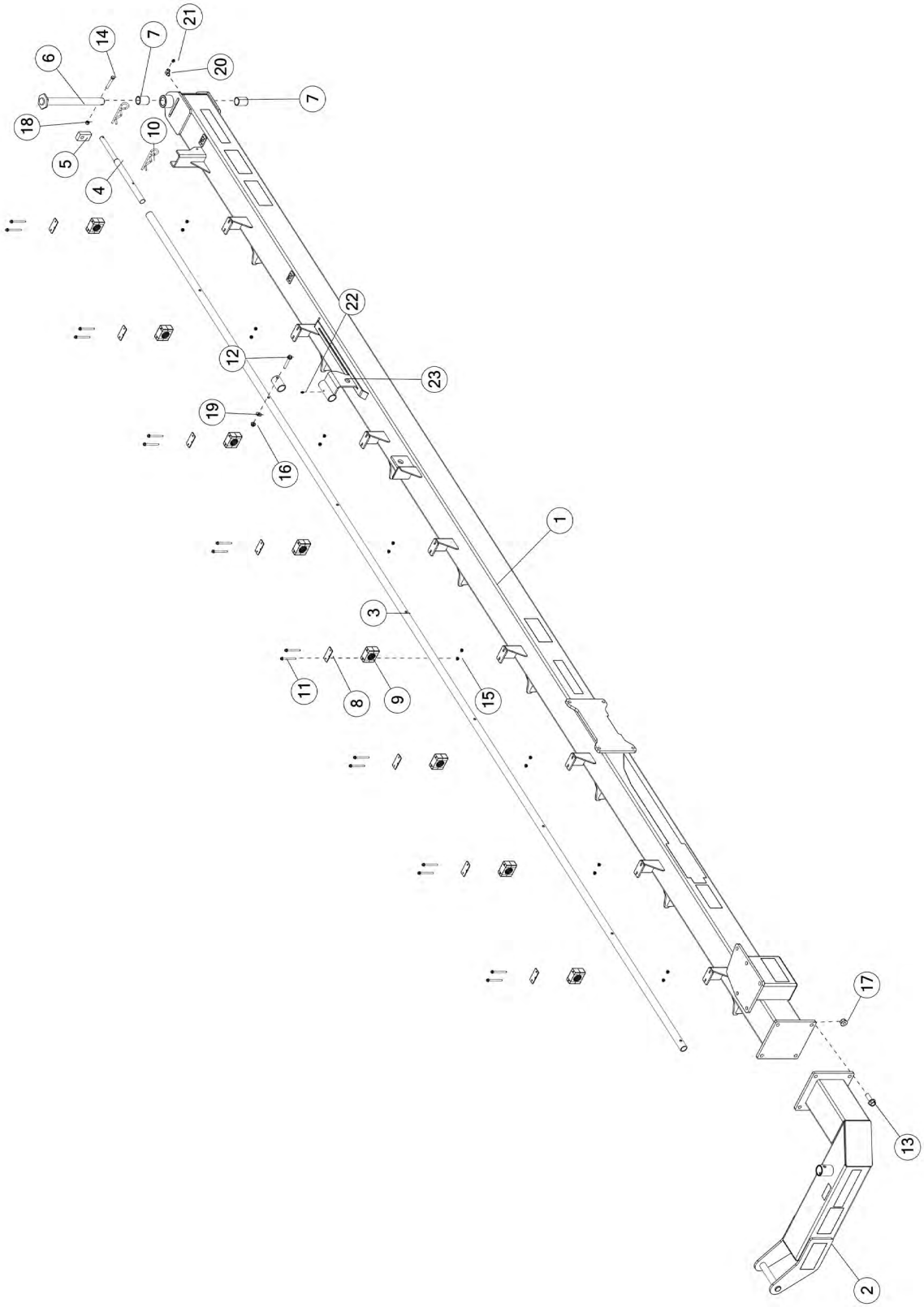

FIGURE 8
MAIN RAKE BEAM ARM LH & COMPONENTS

ITEM	QTY	PART#	DESCRIPTION
1	1	82687	RAKE BEAM LH
2	1	82291	BEAM STANDOFF LH
3	1	81151	LIFTING PIPE RH
4	1	81286	RAKE ARM LOCK-UP SHAFT
5	1	64103	RAKE PRESSURE HANDLE
6	1	FR10	U JOINT PIN
7	2	RG132	BUSHING
8	8	56566	HOSE CLAMP COVER
9	8	69113	HOSE CLAMP CUSION
10	2	YPHR08040	HAIR PIN, 1/4 X 5
11	16	YBFB08300	BOLT FLANGE, 1/4 X 3 G5
12	1	YBFB12250	BOLT FLANGE, 3/8 X 2-1/2 G5
13	4	YBFB20200	BOLT FLANGE, 5/8 X 2 G5
14	1	YBHH12090	BOLT, 3/8 X 2-1/2 G5
15	16	YNFG08010	NUT FLANGE, 1/4
16	1	YNFG12006	NUT FLANGE, 3/8
17	4	YNFG20005	NUT FLANGE, 5/8 LKTL
18	1	YNTL12005	NUT HEX, 3/8 LKTL
19	1	YWFL12005	WASHER FLAT, 3/8 USS
20	1	58453	ELBOW
21	1	BFR28	GREASE ZERK, 1/8
22	1	MS26	SHORT SHANK ZERK (STRAIGHT)
23	1	81314	LIFTING PIPE CYL MOUNT LH

FIGURE 9
FRONT CASTER & COMPONENTS

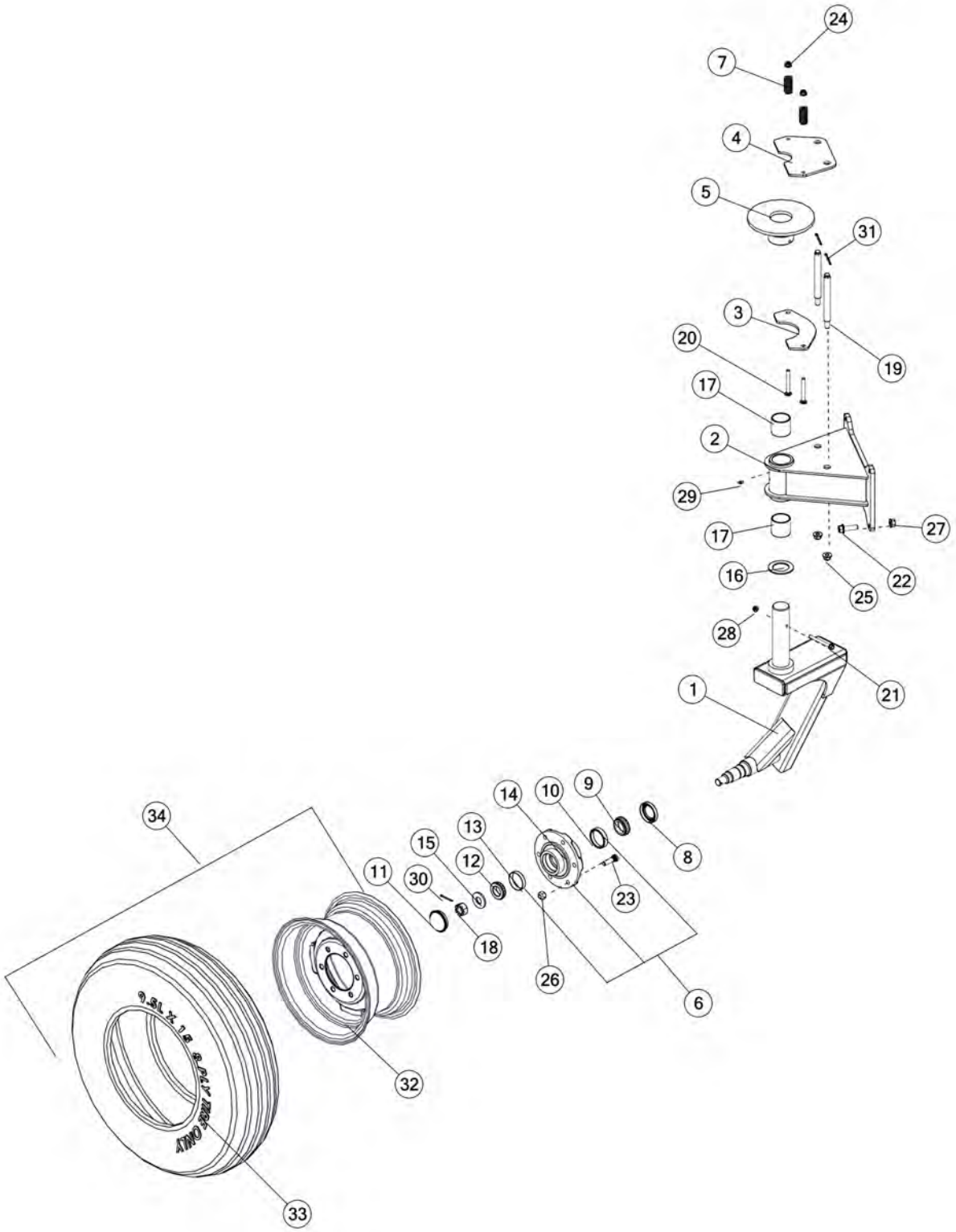

FIGURE 9
FRONT CASTER & COMPONENTS

ITEM	QTY	PART#	DESCRIPTION
1	1	81647	CASTER RH
*	1	81646	CASTER LH
2	1	82694	CASTER MOUNT
3	1	81194	BRAKE PINCHER PLATE BOTTOM
4	1	81198	BRAKE PINCHER PLATE TOP
5	1	81223	BRAKE DISK
6	1	RG101	HUB W/RACES
7	2	WM210	SPRING
8	1	12N17	HUB
9	1	12N18	TAPER BEARING
10	1	12N19	INNER RACE
11	1	17G144	HUB CAP
12	1	17G145	TAPER BEARING
13	1	17G146	OUTER RACE
14	1	RG101	HUB
15	1	HD200	WASHER
16	1	RG24	BRONZE THRUST WASHER
17	2	RG26	BUSHING
18	1	YNSL28005	NUT SLOT, 7/8 G2
19	2	82658	BRAKE STAND PIN
20	2	YBCR12080	BOLT CARR, 3/8 X 3-1/4, G5
21	1	YBFB10350	BOLT FLANGE, 5/16 X 3-1/2 G5
22	4	YBFB16175	BOLT FLANGE, 1/2 X 1-3/4 G5
23	6	YBSD16005	BOLT STUD, 1/2 X 1-7/8 G5
24	2	YNFG12006	NUT FLANGE, 3/8
25	2	YNFG16003	NUT FLANGE, 1/2
26	6	YNWL16005	NUT WHEEL, 1/2 G5
27	4	YNFG16005	NUT FLANGE, 1/2 LKTL
28	1	YNFG10005	NUT FLANGE, 5/16
29	1	G89	STRAIGHT ZERK, 1/4 - 28 X 90
30	1	YPCT05010	COTTER PIN, 5/32 X 1-1/2
31	2	YPCT06020	COTTER PIN, 3/16 X 2
32	1	12N24	WHEEL, 15 X 8
33	1	UR1A	TIRE 9.5L X 15 PLY
34	1	33511	TIRE & WHEEL ASSY.

***MEANS NOT SHOWN**

FIGURE 10
RAKE WHEEL & COMPONENTS

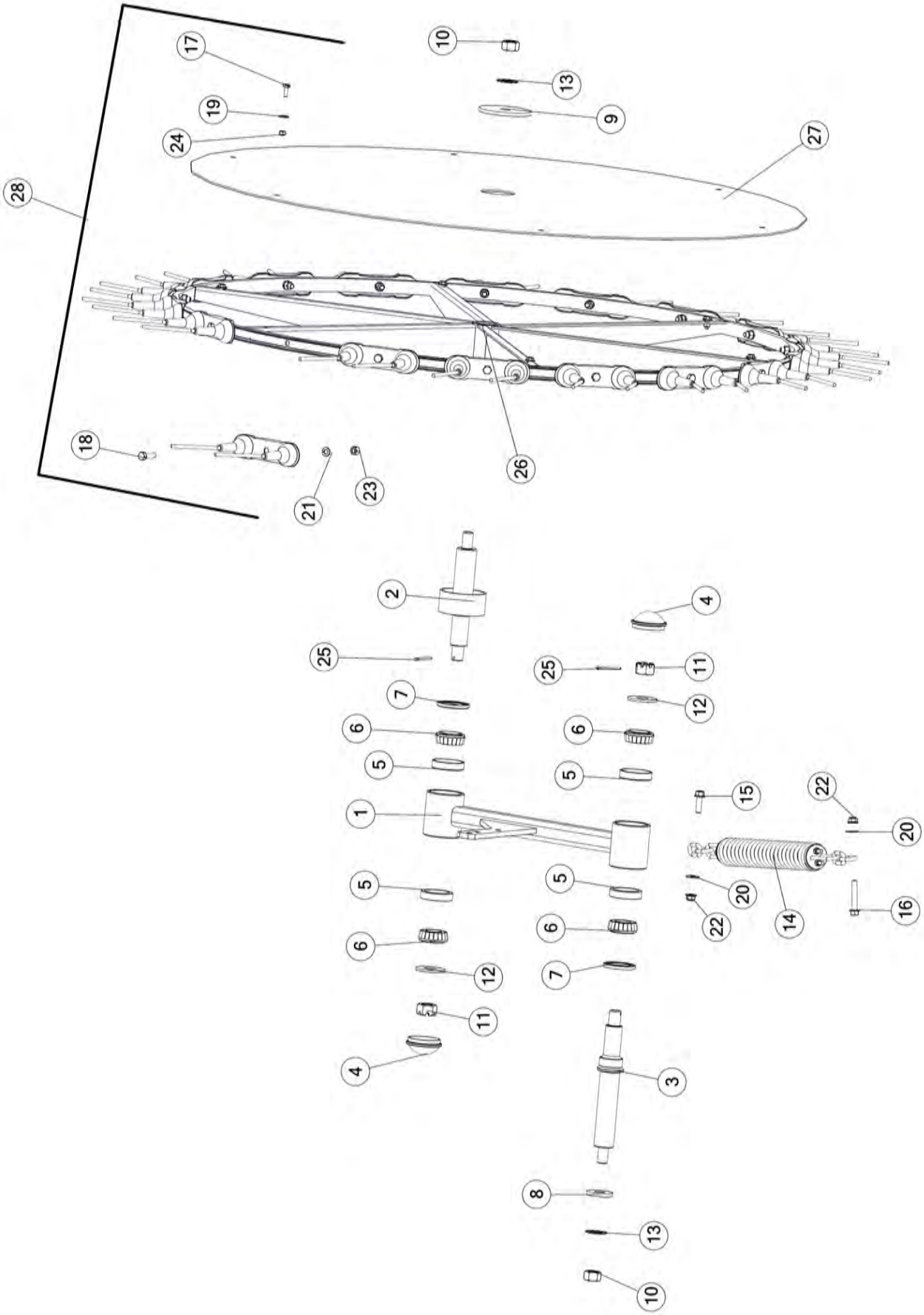

FIGURE 10
RAKE WHEEL & COMPONENTS

ITEM	QTY	PART#	DESCRIPTION
1	1	81271	RAKE ARM
2	1	HD126	RAKE WHEEL SPINDLE ASSY.
3	1	HD125	PIVOT SPINDLE
4	2	17G144	HUB CAP
5	4	3G18	RACE
6	4	HD122	TAPER BEARING
7	2	HD124	SEAL
8	1	HD157	PIVOT WASHER
9	1	HD158	SPINDLE WASHER
10	2	YNHX24005	NUT HEX, 3/4
11	2	YNSL28005	NUT SLOT, 7/8 G2
12	2	YWFL28005	WASHER FLAT, 7/8
13	2	YWSI24005	WASHER LOCK STAR, 3/4
14	1	84181	COMPLETE SPRING ASSY.
15	1	YBFB12125	BOLT FLANGE, 3/8 X 1-1/4 G5
16	1	YBFB12225	BOLT FLANGE, 3/8 X 2-1/4 G5
17	6	YBHH08100	BOLT, 1/4 X 3/4 G5
18	18	YBHH12035	BOLT, 3/8 X 1-1/4 G5
19	6	YWFL08005	WASHER FLAT, 1/4 USS
20	2	YWFL12005	WASHER FLAT, 3/8 USS
21	18	YWLO12005	WASHER LOCK, 3/8
22	2	YNFG12006	NUT FLANGE, 3/8 GF
23	18	YNHX12005	NUT HEX, 3/8
24	6	YNTL08005	NUT HEX, 1/4
25	2	YPCT05010	COTTER PIN, 5/32 X 1-1/2
26	1	HD117	RAKE WHEEL
27	1	HD118	POLY
28	1	HD204	COMPLETE RAKE WHEEL RH

FIGURE 11
HYDRAULICS & COMPONENTS

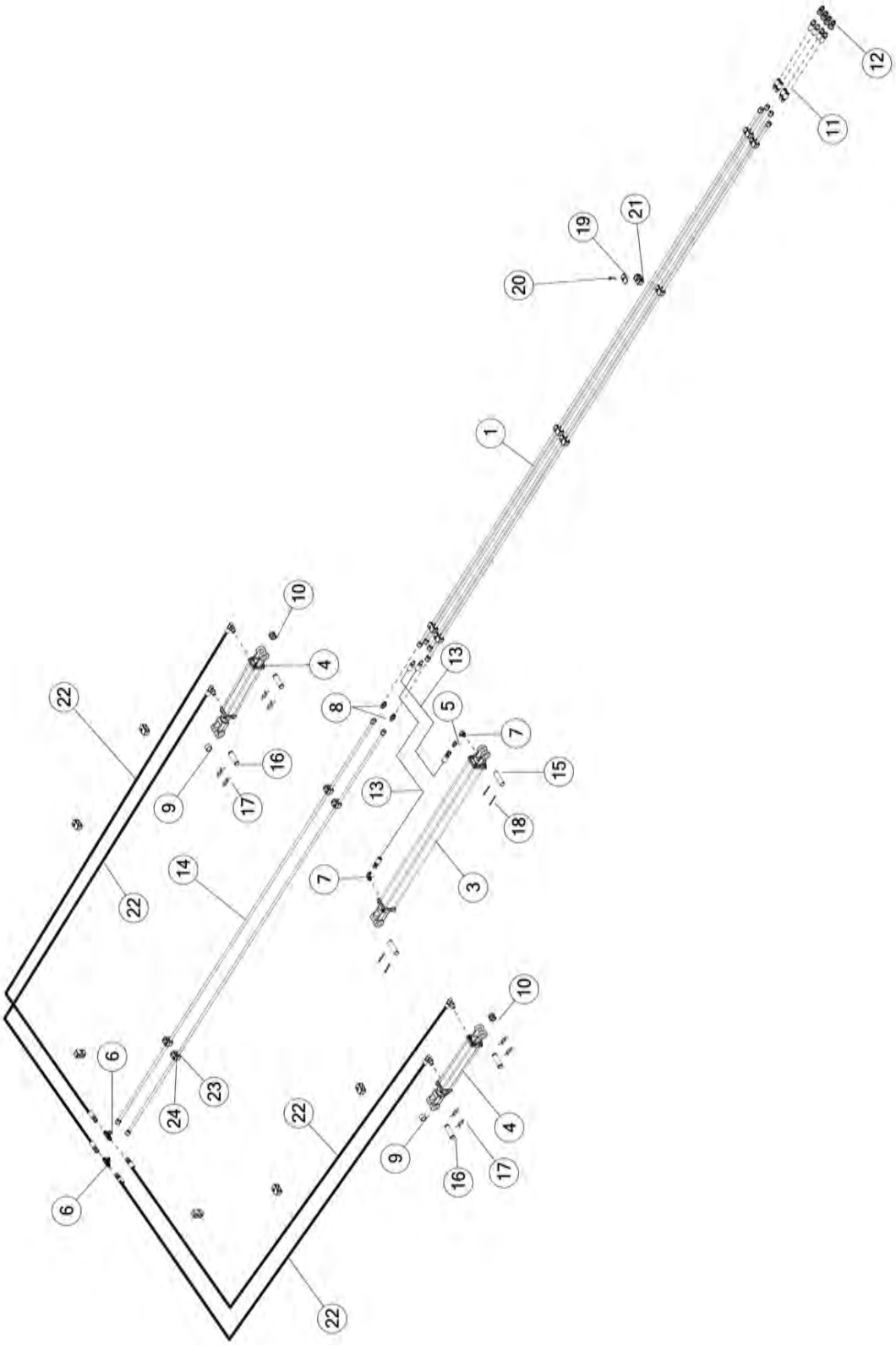

FIGURE 11
HYDRAULICS & COMPONENTS

ITEM	QTY	PART#	DESCRIPTION
1	4	82297	HYD HARDLINE
2	2	82298	HYD HARDLINE
3	1	71386	HYD CYLINDER
4	2	81290	HYD CYLINDER
5	1	58143	CONNECTOR
6	2	81311	FITTING, 8 JIC, 8 JIC, 8 JIC, STL
7	2	CHM268	ELBOW
8	2	GM17	ADAPTER
9	2	HD187	SPACER 3/4 X 1
10	2	X94	SPACER
11	4	81231	HYD HOSE
12	4	67148	QUICK COUPLER TIP
13	2	81229	HYD HOSE
14	4	81322	HYD HOSE
15	2	BFR634	CYLINDER PIN
16	4	T143	CYLINDER PIN
17	8	T144	CLIP PIN
18	4	YPCT06020	COTTER PIN, 3/16 X 2
19	18	56563	CLAMP TOP PLATE
20	18	56568	CLAMP BOLT 5/16 X 1-3/8
21	18	TS118	LINE CLAMP BLOCK
22	4	81322	HOSE
23	4	56624	HOSE CLAMP CUSION
24	4	56565	CLAMP COVER

FIGURE 12
OPEN CYLINDER

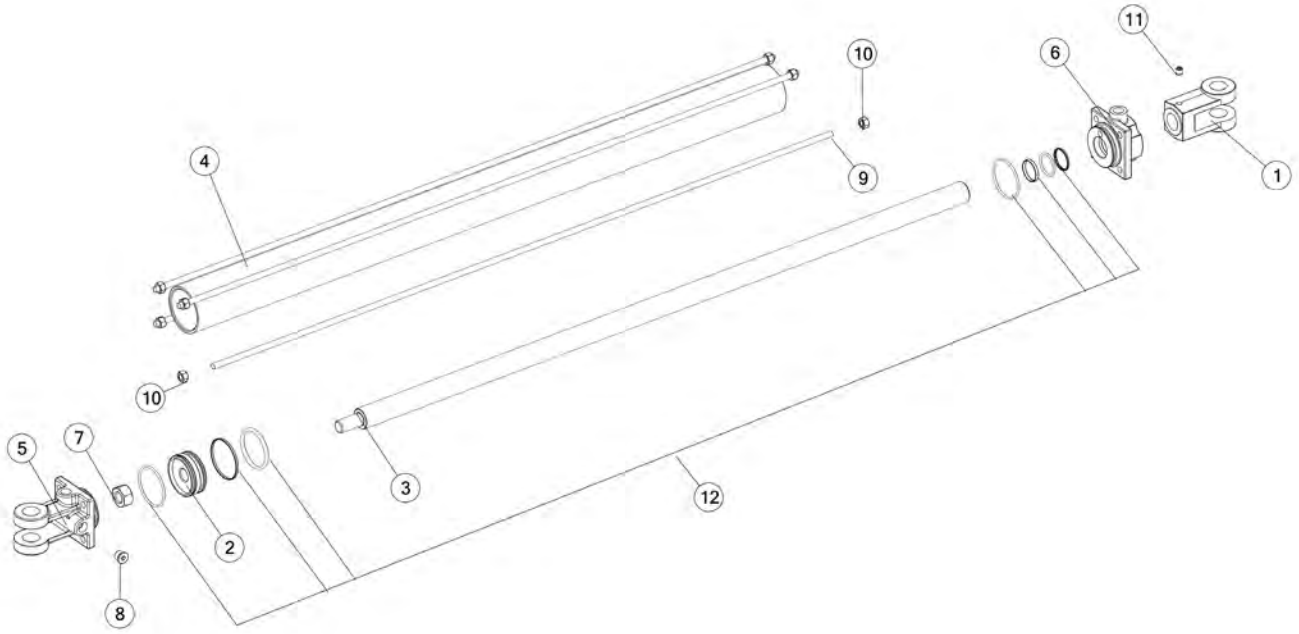

FIGURE 12
OPEN CYLINDER

ITEM	QTY	PART#	DESCRIPTION
1	1	23N150A	ROD CLEVIS
2	1	56181	PISTON
3	1	60626	ROD
4	1	60627	CYLINDER TUBE
5	1	71387	CLEVIS CAP
6	1	71388	ROD CAP
7	1	23N148	PISTON NUT
8	1	71261	PLUG, #6 ORB
9	4	BFR656	TIE ROD
10	8	YNHX12006	NUT HEX, 3/8 G2
11	1	YSSO12015	SET SCREW SOCKET, 3/8 X 3/8
12	1	58687	SEAL KIT
*	1	71386	CYLINDER

***MEANS NOT SHOWN**

FIGURE 13
LIFT CYLINDER

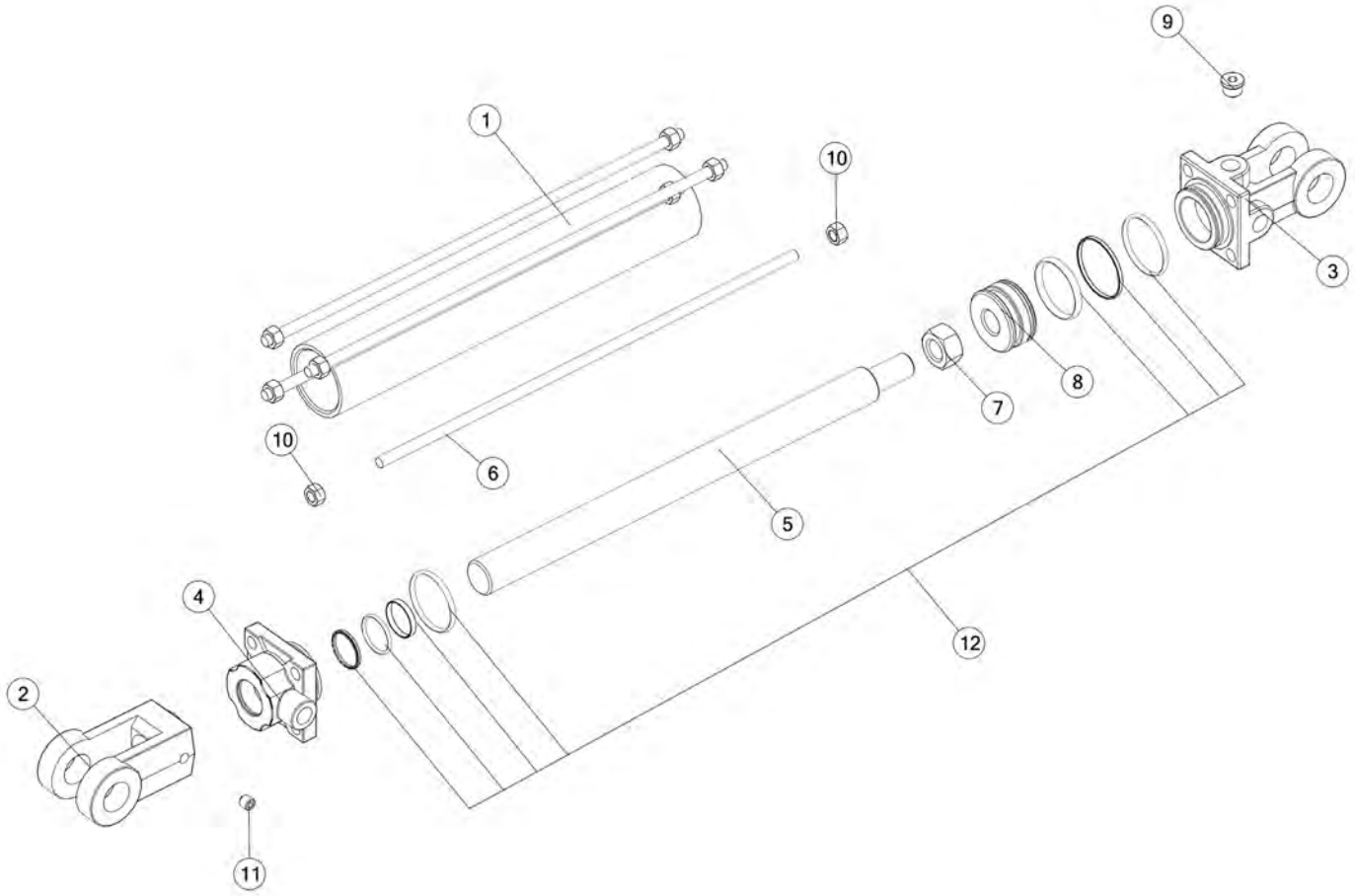

FIGURE 13
LIFT CYLINDER

ITEM	QTY	PART#	DESCRIPTION
1	1	56451	CYLINDER TUBE
2	1	23N150A	ROD CLEVIS
3	1	66932	CLEVIS CAP
4	1	66934	ROD CAP
5	1	56450	CYLINDER ROD
6	4	56450	CYLINDER TIE ROD
7	1	23N148	PISTON NUT
8	1	56180	PISTON
9	1	SD270	HOLLOW HEX PLUG
10	8	YNHX12006	NUT HEX, 3/8 G2
11	1	YSSO12015	SET SCREW SOCKET, 3/8 X 3/8
12	1	56187	SEAL KIT
*	1	81290	CYLINDER

***MEANS NOT SHOWN**

FIGURE 14
OPTIONAL HYDRAULIC REAR OPENING CYLINDER

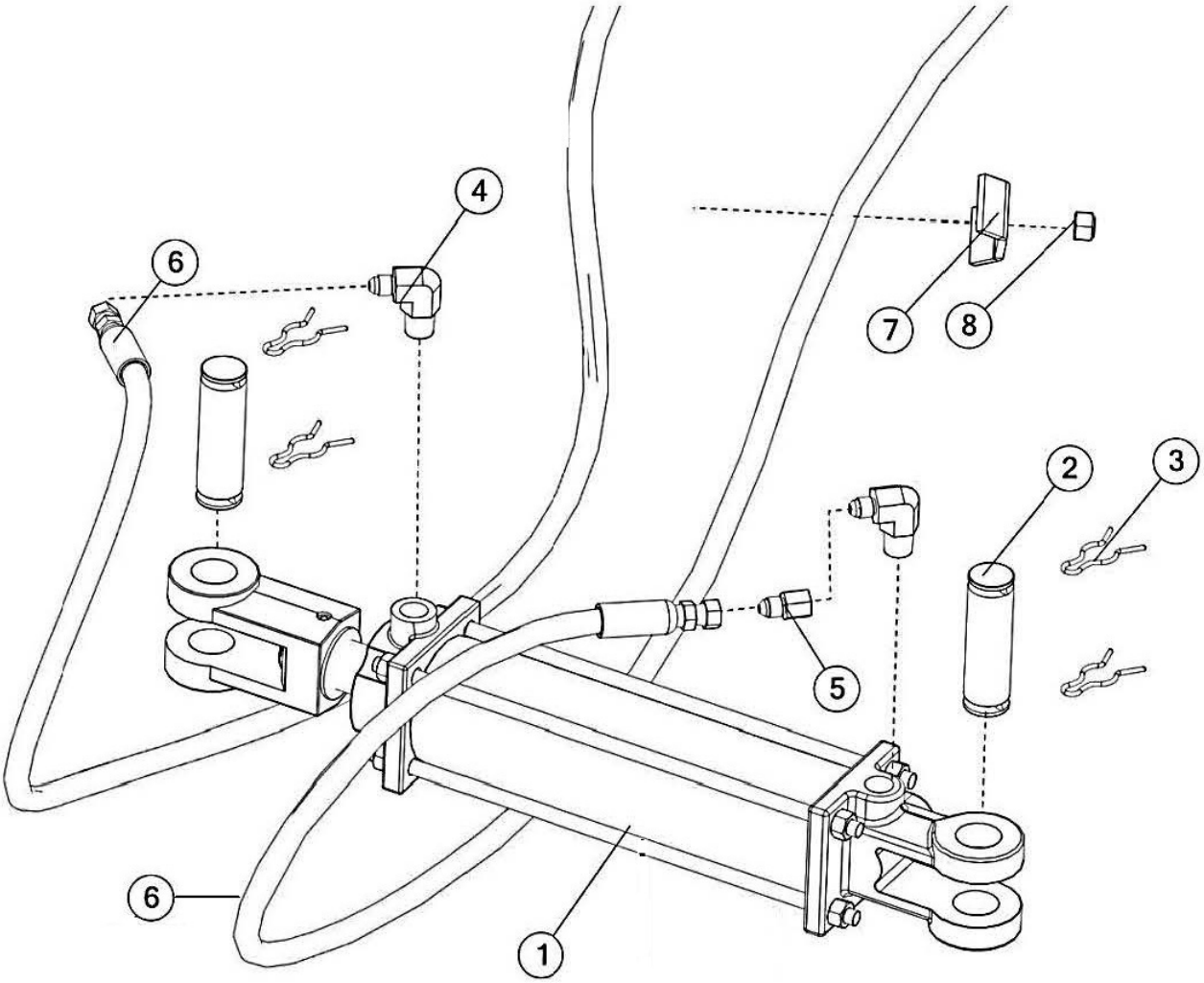

FIGURE 14
OPTIONAL HYDRAULIC REAR OPENING CYLINDER

ITEM	QTY	PART#	DESCRIPTION
1	1	71743	CYLINDER
2	2	T143	HYDRAULIC CYLINDER PIN
3	4	YPHR02020	HAIR PIN
4	2	CHM268	ELBOW
5	1	58142	FITTING
6	2	71760	HYDRAULIC HOSE
7	1	23N67	HOSE BRACKET
8	1	YNTL12005	NUT HEX TOP LOCK, 3/8
*	1	56188	SEAL KIT
*	2	67148	QUICK COUPLER TIP

***MEANS NOT SHOWN**

FIGURE 15
2 WHEEL EXTENSION OPTION

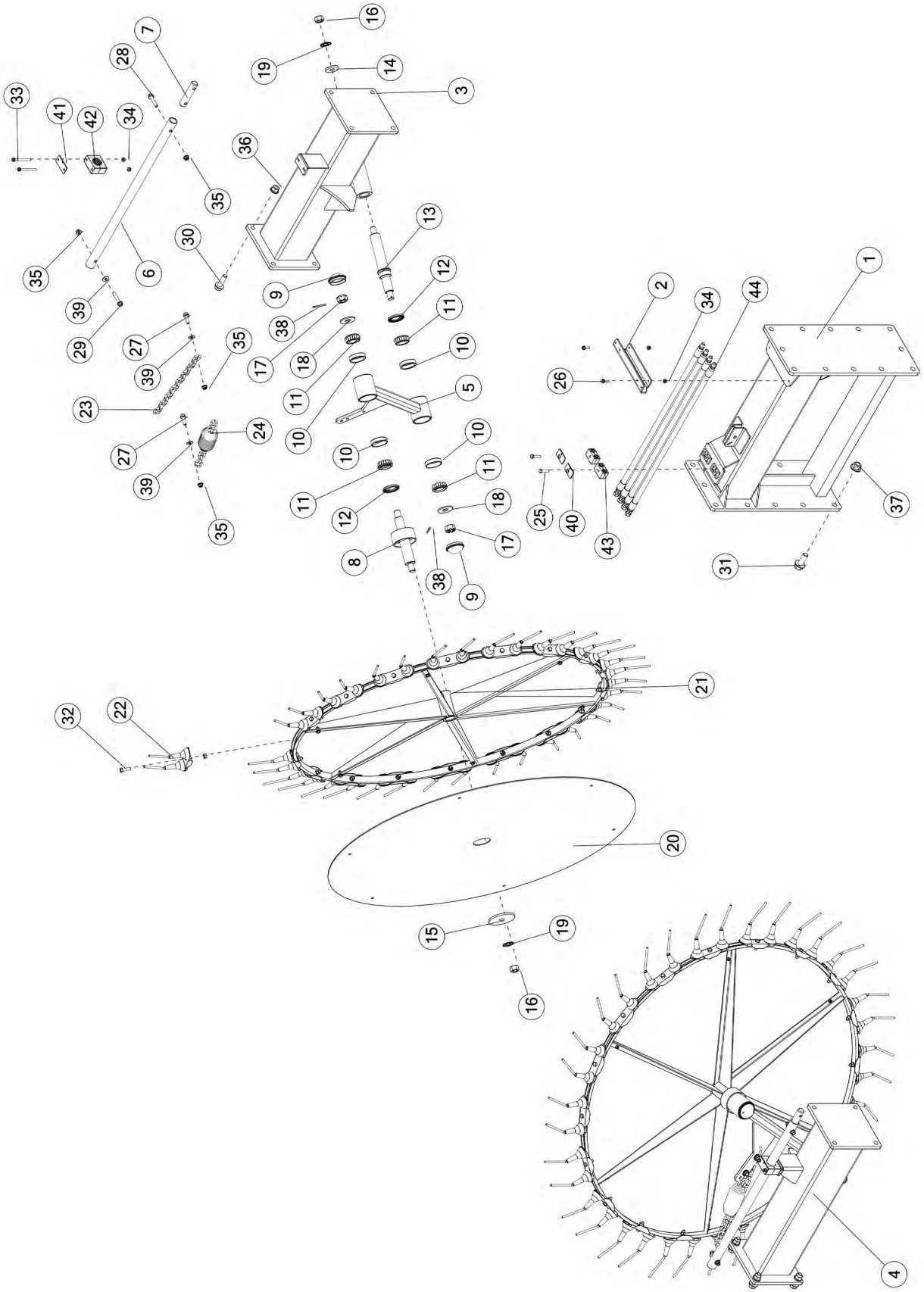

FIGURE 15
2 WHEEL EXTENSION OPTION

ITEM	QTY	PART#	DESCRIPTION
1	1	82836	POLE FRONT
2	1	82846	ROPE BRACKET
3	1	82825	EXTENTION RH
4	1	82822	EXTENTION LH
5	1	81271	RAKE ARM
6	1	82833	LIFTING PIPE
7	1	82834	EXTENTION PIN
8	1	HD126	ASSM, RAKE WHEEL SPINDLE
9	2	17G144	HUB CAP
10	4	3G18	RACE
11	4	HD122	TAPER BEARING
12	2	HD124	SEAL
13	1	HD125	PIVOT SPINDLE
14	1	HD157	PIVOT WASHER
15	1	HD158	SPINDLE WASHER
16	2	YNHX24005	NUT HEX, 3/4
17	2	YNSL28005	NUT SLOT, 7/8 G2
18	2	YWFL28005	WASHER FLAT, 7/8 USS
19	2	YWSI24005	WASHER LOCK, 3/4
20	1	HD118	POLY
21	1	HD117	RAKE WHEEL ASSY
22	1	58710	DOUBLE RUBBER RAKE TOOTH
23	1	FR58	CHAIN (15 LINKS)
24	1	8771	RAKE WHEEL SPRING
25	1	56568	CLAMP BOLT 5/16 x 1-3/8
26	1	YBFB08100	BOLT FLANGE, 1/4 X 1 G5
27	2	YBFB12125	BOLT FLANGE, 3/8 X 1-1/4 G5
28	1	YBFB12200	BOLT FLANGE, 3/8 X 2 G5
29	1	YBFB12225	BOLT FLANGE, 3/8 X 2-1/4 G5
30	1	YBFB20200	BOLT FLANGE, 5/8 X 2 G5
31	1	YBFB24200	BOLT FLANGE, 3/4 X 2 G5
32	1	YBHH12035	BOLT FLANGE, 3/8 X 1-1/4 G5
33	1	YBFB08300	BOLT FLANGE, 1/4 X 3 G5
34	2	YNFG08005	NUT FLANGE, 1/4
35	4	YNFG12006	NUT FLANGE, 3/8
36	1	YNFG20005	NUT FLANGE, 5/8
37	1	YNFG24006	NUT HEX TOP LOCK, 3/4
38	2	YPCT05010	COTTER PIN 5/32 X 1-1/2
39	3	YWFL12005	WASHER FLAT, 3/8 USS
40	1	56563	CLAMP TOP PLATE
41	1	56566	S5 HOSE CLAMP COVER
42	1	69113	HOSE CLAMP CUSION
43	1	CHM278	HOSE CLAMP
44	1	82849	HYDRAULIC HOSE
*	1	HD204	COMPLETE RAKE WHEEL RH
*	1	HD203	COMPLETE RAKE WHEEL LH

***MEANS NOT SHOWN**

FIGURE 16
CASTER AND COMPONENT OPTIONS

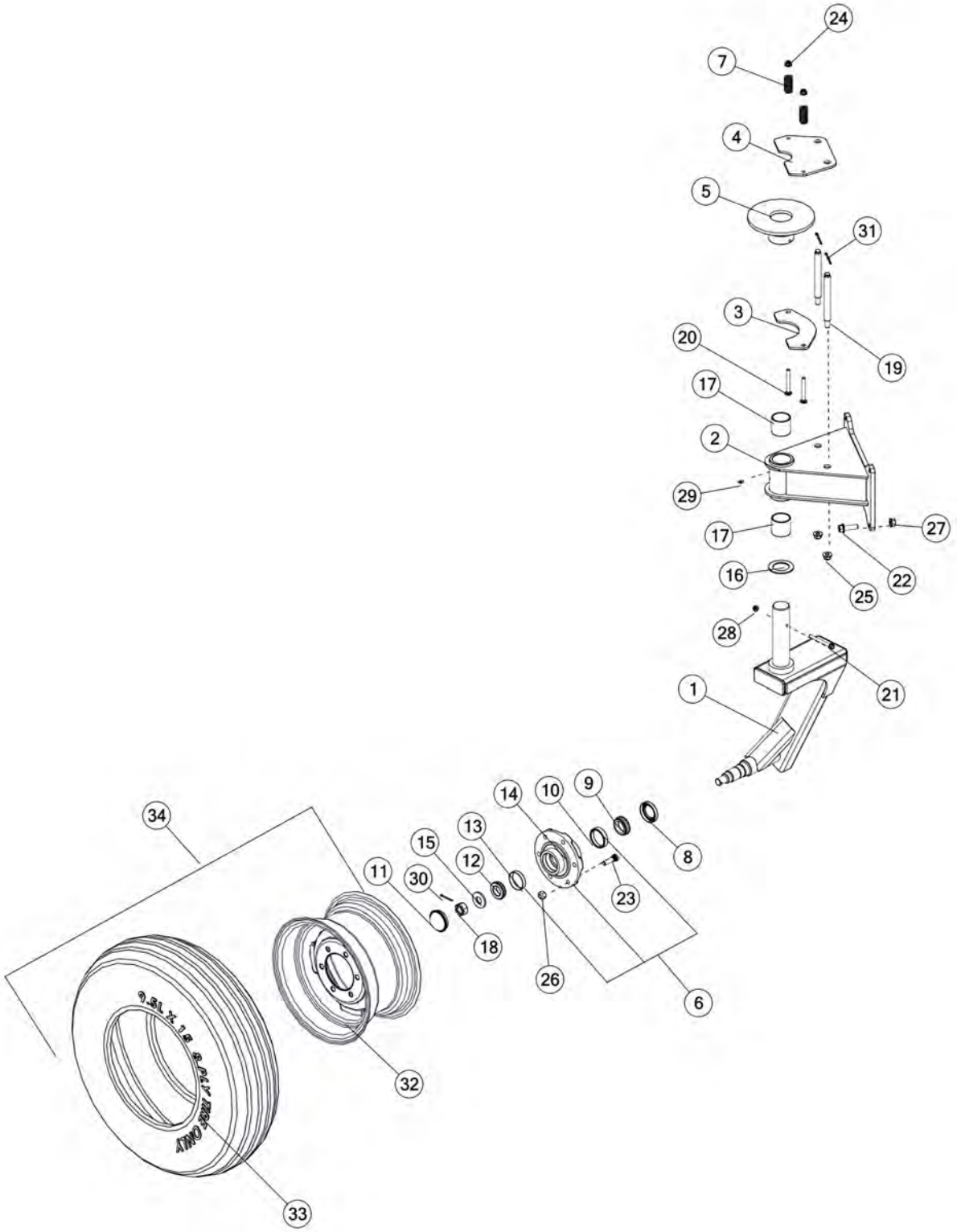

FIGURE 16
CASTER AND COMPONENT OPTIONS

ITEM	QTY	PART#	DESCRIPTION
1	1	81647	CASTER RH
*	1	81646	CASTER LH
2	1	82694	CASTER MOUNT
3	1	81194	BRAKE PINCHER PLATE BOTTOM
4	1	81198	BRAKE PINCHER PLATE TOP
5	1	81223	BRAKE DISK
6	1	RG101	HUB W/RACES
7	2	WM210	SPRING
8	1	12N17	HUB
9	1	12N18	BEARING
10	1	12N19	INNER RACE
11	1	17G144	HUB CAP
12	1	17G145	ROLLER BEARING
13	1	17G146	OUTER RACE
14	1	58401	HUB
15	1	HD200	WASHER
16	1	RG24	BRONZE THRUST WASHER
17	2	RG26	BUSHING
18	1	YNSL28005	NUT SLOT, 7/8 G2
19	2	82658	BRAKE STAND PIN
20	2	YBCR12080	BOLT CARR, 3/8 X 3-1/4, G5
21	1	YBFB10350	BOLT FLANGE, 5/16 X 3-1/2 G5
22	4	YBFB16175	BOLT FLANGE, 1/2 X 1-3/4 G5
23	6	YBSD16005	BOLT STUD, 1/2 X 1-7/8 G5
24	2	YNFG12006	NUT FLANGE, 3/8
25	2	YNFG16003	NUT FLANGE, 1/2
26	6	YNWL16005	NUT WHEEL, 1/2 G5
27	4	YNFG16005	NUT FLANGE, 1/2 LKTL
28	1	YNFG10005	NUT FLANGE, 5/16
29	1	G89	ZERK 1/4-28
30	1	YPCT05010	COTTER PIN, 5/32 X 1-1/2
31	2	YPCT06020	COTTER PIN, 3/16 X 2
32	1	12N24	WHEEL, 15 X 8
33	1	UR1A	TIRE 9.5L X 15 PLY
34	1	33511	TIRE & WHEEL ASSY.

***MEANS NOT SHOWN**

PARTS NOTES

CHANGE NOTES

1. THIS IS FOR THE FIRST 6 BULT FOR PROTOTYPES. COLLOR WAS BLACK

H&S MFG. CO.

products approved

for the

FEMA

SEAL OF QUALITY

SEAL OF QUALITY

FEMA

FARM EQUIPMENT MANUFACTURERS ASSOCIATION