HC7116

HI-CAPACITY RAKE

PARTS BOOK

Part #82875 HSMFG031423 Rev. #07 Starting Ser. #321HCD6031

STRONG HERITAGE - STRONG PEOPLE - STRONGER FUTURE

TABLE OF CONTENTS

FIGURE #	CONTENTS	PAGE #
*	INSTRUCTIONS FOR ORDERING PARTS	1
1	FRONT POLE AND COMPONENTS	2-3
2	TRANSPORT LOCK AND COMPONENTS	4-5
3	CENTER POLE AND SLIDER	6-7
4	MAIN FRAME REAR AND UPRIGHTS	8-9
5	TANDEMS AND TIRES	10-11
6	LINKAGE ARMS AND COMPONENTS	12-13
7	MAIN RAKE BEAM ARM RH AND COMPONENTS	14-15
8	MAIN RAKE BEAM ARM LH AND COMPONENTS	16-17
9	FRONT CASTER AND COMPONENTS	18-19
10	RAKE WHEEL COMPONENTS	20-21
11	HYDRAULICS AND COMPONENTS	22-23
12	OPEN CYLINDER	24
13	LIFT CYLINDER	25
14	OPTIONAL 2 WHEEL EXTENSION	26-27
15	OPTIONAL 2 - POINT HITCH	28-29
16	OPTIONAL INTERRUPTER 8000 CORN STALK BREAKER	30-31
17	OPTIONAL KICKER WHEEL	32-33
18	OPTIONAL LIGHTS	34-35
*	PARTS NOTES	36-41
		42

INSTRUCTIONS FOR ORDERING PARTS

All service parts should be ordered through your authorized H&S dealer. He will be able to give you faster service if you will provide them with the following:

1. Model & Serial Number - Both can be located on the left side of the rear frame.

2. All references to left or right apply to the machine as viewed from the rear.

3. Parts <u>should not</u> be ordered from illustration only. Please order complete part number.

4. If your dealer has to order parts - give shipping instructions:

   VIA truck - large pieces (please specify local truck lines)

   VIA United Parcel Service (include full address)

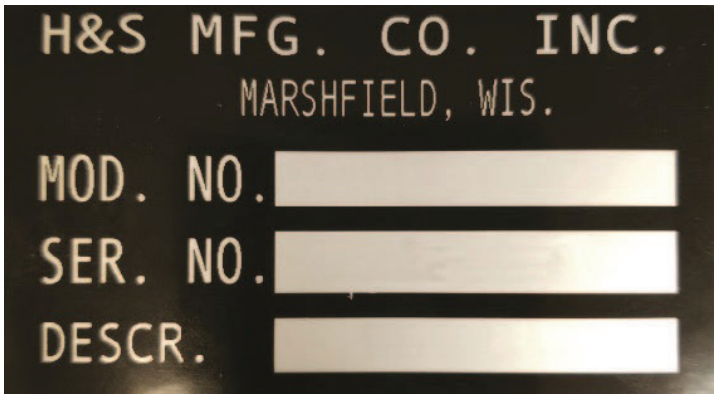

PLEASE RECORD NUMBERS FOR YOUR UNIT FOR QUICK REFERENCE

ABOUT IMPROVEMENTS

H&S IS CONTINUALLY STRIVING TO IMPROVE ITS PRODUCTS

We must, therefore, reserve the right to make improvements or changes whenever it becomes practical to do so, without incurring any obligation to make changes or additions to the equipment previously sold.

FIGURE 1
FRONT POLE & COMPONENTS

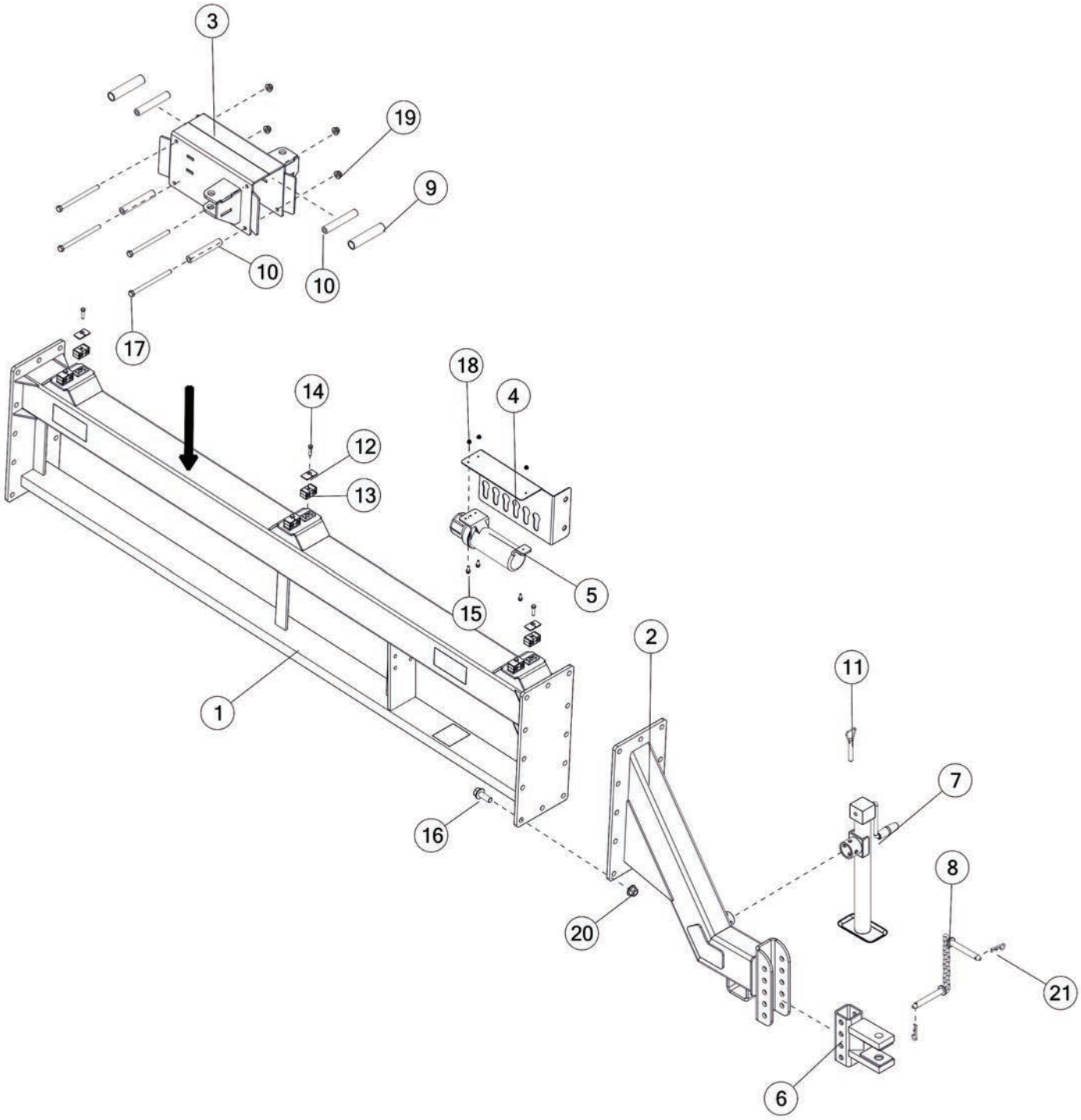

FIGURE 1
FRONT POLE & COMPONENTS

REF #	PART #	DESCRIPTION	QTY
1	89097	FRONT POLE	1
2	81030	HITCH	1
3	81039	LINKAGE SLIDER, FRONT	1
4	60269	HOSE HOLDER	1
5	S522	MANUAL HOLDER	1
6	HD83	HITCH CLEVIS	1
7	BFR753A	JACK	1
8	87599	HITCH PIN	1
9	58297	BACK SLIDER ROLLER	2
10	58298	SLIDER SPACER	4
11	12N117	PIN	1
12	56563	CLAMP TOP PLATE	6
13	TS118	LINE CLAMP BLOCK	12
14	72246	CLAMP BOLT 5/16 x 2-3/8	6
15	YBFB08075	BOLT FLANGE, 1/4 X 3/4 G5	3
16	YBFB24200	BOLT FLANGE, 3/4 X 2 G5	12
17	YBHH16184	BOLT HEX, 1/2 X 7-1/2 G5	4
18	YNFG08010	NUT FLANGE, 1/4	3
19	YNFG16003	NUT FLANGE, 1/2	4
20	YNFG24006	NUT HEX, TOP LOCK, 3/4	12
21	YPHR02010	HAIR PIN	2

FIGURE 2
TRANSPORT LOCK & COMPONENTS

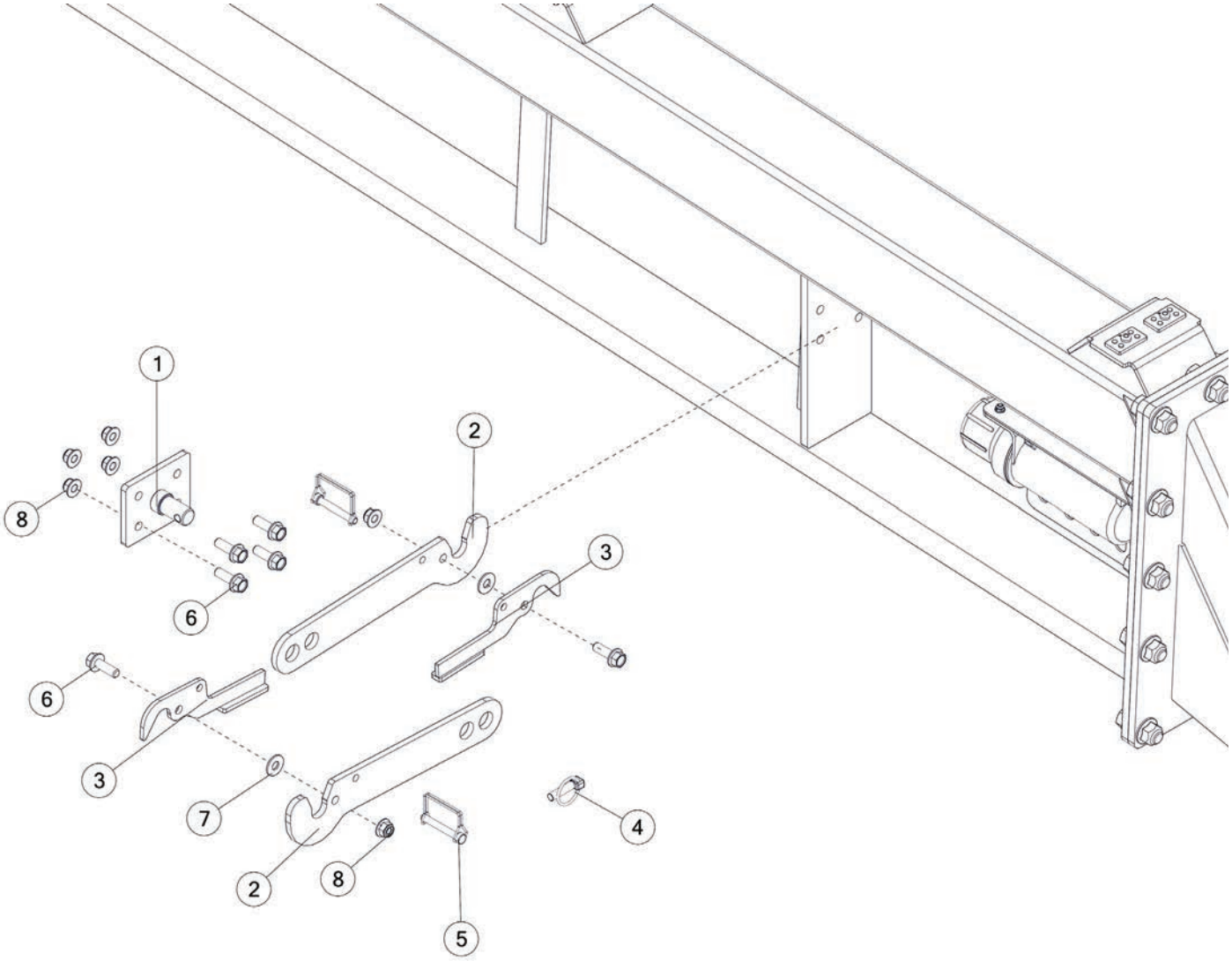

FIGURE 2
TRANSPORT LOCK & COMPONENTS

REF #	PART #	DESCRIPTION	QTY
1	86675	TRANSPORT LOCK BRACKET	1
2	86638	TRANSPORT LOCK BAR	2
3	86641	TRANSPORT LOCK LEVER	2
4	YPLY12010	LYNCH PIN, 7/16 X 1-3/4	1
5	DWM191	SNAPPER PIN	2
6	YBFB16150	BOLT FLANGE, 1/2 X 1-1/2 G5	6
7	YWFL16005	WASHER FLAT, 1/2	2
8	YNFG16003	NUT FLANGE, 1/2	6

FIGURE 3
CENTER POLE & SLIDER

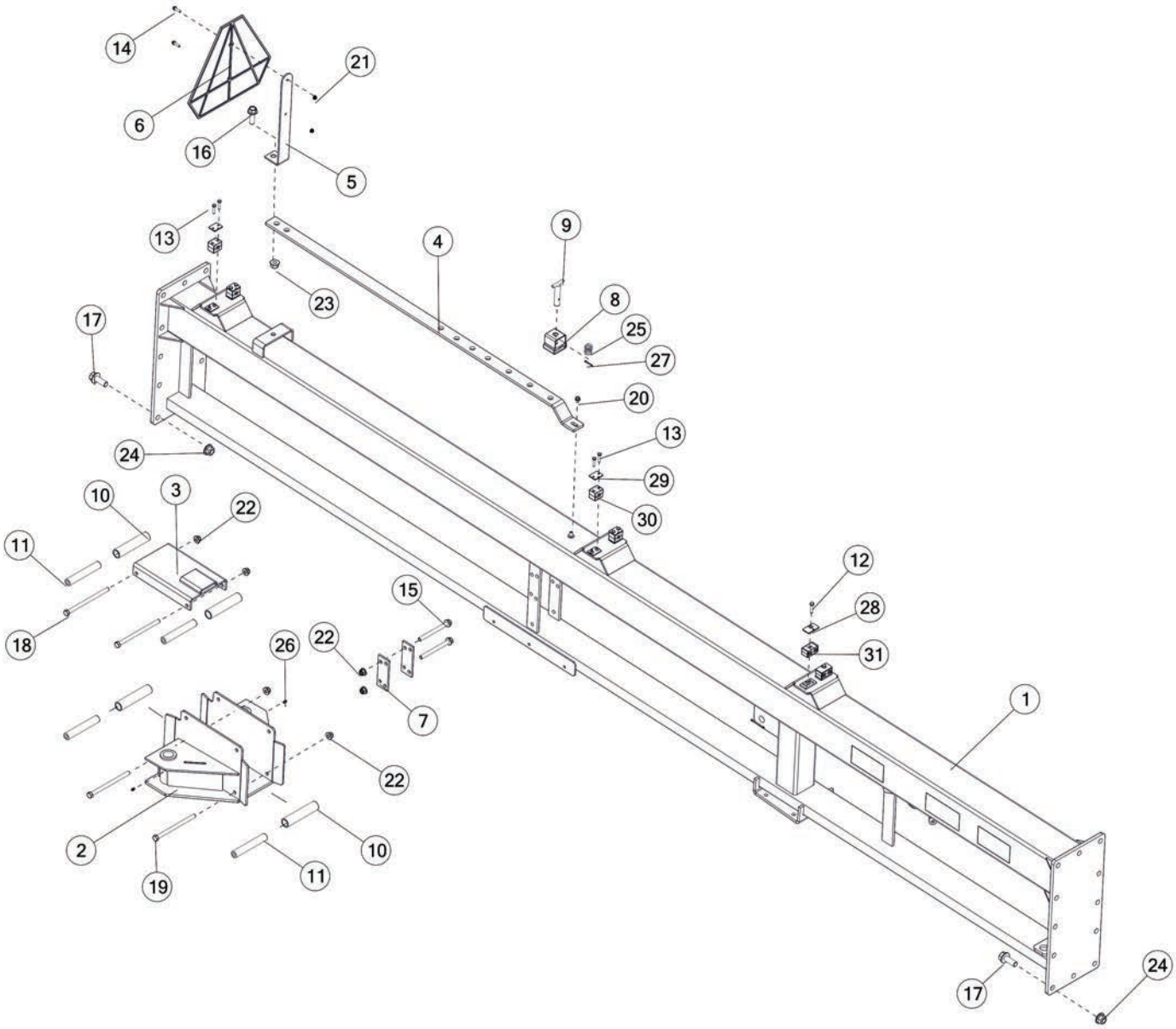

FIGURE 3
CENTER POLE & SLIDER

REF #	PART #	DESCRIPTION	QTY
1	80925B	REAR POLE W/DECALS	1
2	81056	BACK LINKAGE SLIDER	1
3	81192	WIDTH ADJUSTMENT STOP	1
4	67416	WIDTH ADJUSTMENT BAR	1
5	63408	SMV BRACKET	1
6	BFR723	SMV SIGN	1
7	58692	SPACER	2
8	BFR239	SLEEVE LOCK ADJUSTMENT	1
9	BFR241	ADJUSTMENT HANDLE	1
10	58297	SLIDER ROLLER BACK	4
11	58298	SLIDER SPACER	4
12	72246	CLAMP BOLT, 5/16 X 2-3/8	2
13	YBHH08070	BOLT HEX, 1/4 X 2-3/4 G5	8
14	YBFB08100	BOLT FLANGE, 1/4 X 1 G5	2
15	YBFB16550	BOLT FLANGE, 1/2 X 5-1/2 G5	2
16	YBFB20200	BOLT FLANGE, 5/8 X 2 G5	1
17	YBFB24200	BOLT FLANGE, 3/4 X 2 G5	12
18	YBHH16182	BOLT HEX, 1/2 X 8 G5	2
19	YBHH16184	BOLT HEX, 1/2 X 7-1/2 G5	2
20	YBFB10002	BOLT FLANGE, 5/16 X 1/2 G5	1
21	YNFG08010	NUT FLANGE, 1/4	2
22	YNFG16003	NUT FLANGE, 1/2	4
23	YNFG20005	NUT FLANGE, 5/8 LKTL	1
24	YNFG24006	NUT HEX FLANGE TOP LOCK, 3/4	12
25	BFR240	SPRING	1
26	G89	STRAIGHT ZERK, 1/4-28 X 90	2
27	YPCT05005	COTTER PIN, 5/32 X 1	1
28	56563	CLAMP PLATE	2
29	56565	CLAMP COVER	4
30	56624	HOSE CLAMP	8
31	TS118	CLAMP BLOCK	4

FIGURE 4
MAIN FRAME REAR & UPRIGHTS

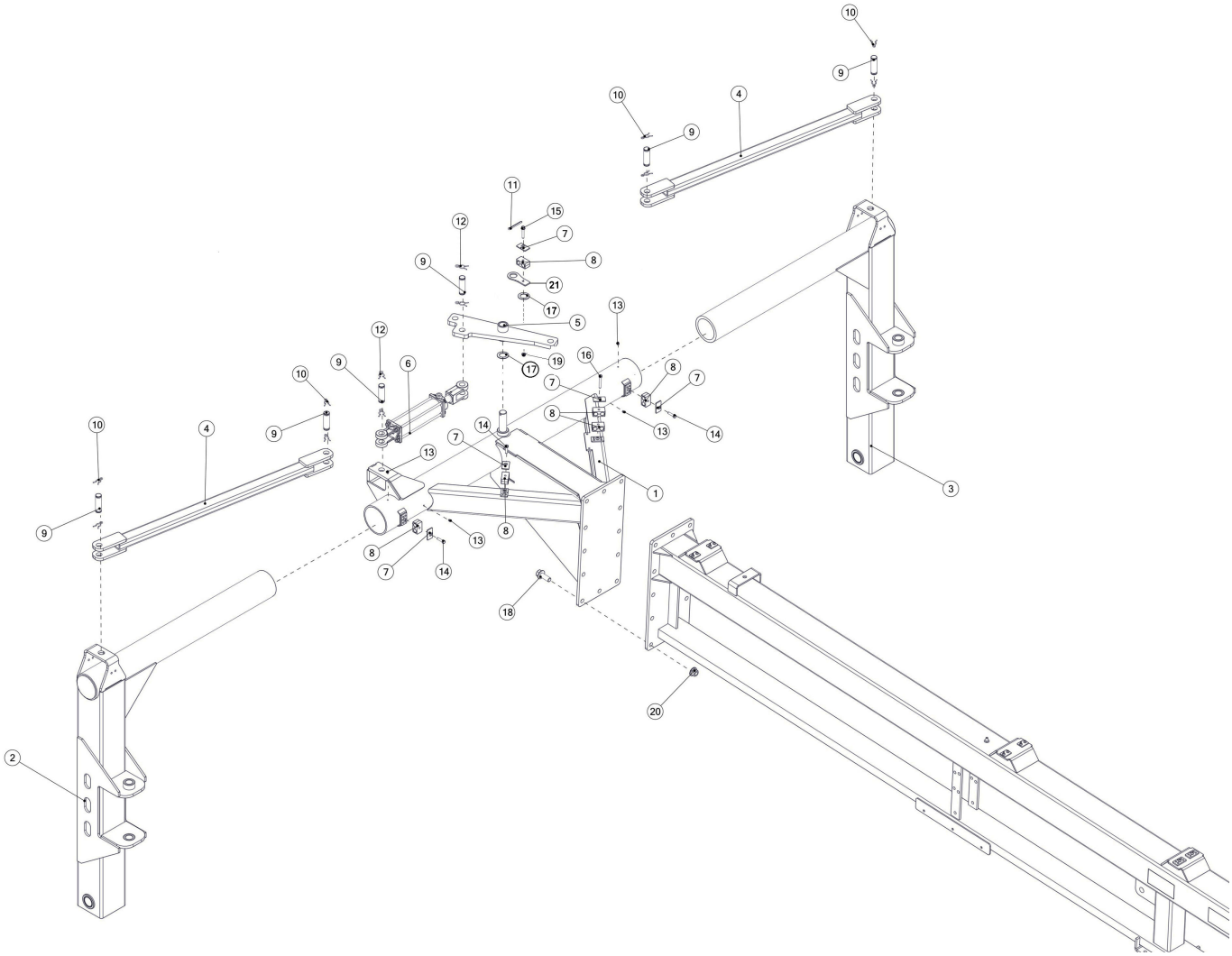

FIGURE 4
MAIN FRAME REAR & UPRIGHTS

REF #	PART #	DESCRIPTION	QTY
1	82678B	FRAME, REAR, W/DECALS	1
2	82675B	UPRIGHT RH W/DECALS	1
3	82684B	UPRIGHT LH W/DECALS	1
4	89124	CYLINDER LINK	2
5	HD8	CAM ARM	1
6	71743	HYD CYL, 2.50, 20.3 X 28.3	1
7	56563	CLAMP TOP PLATE	5
8	CHM278	3/8 TWO LINE CLAMP BLOCK	6
9	T143	HYDRAULIC CYLINDER PIN	6
10	53371	CYLINDER PIN	4
11	YPCT08010	COTTER PIN, 1/4 X 2-1/2	1
12	YPHR02020	HAIR PIN, #23-10 (SAME AS PART# T144)	2
13	G89	1/4”-28 STRAIGHT ZERK	4
14	56568	CLAMP BOLT 5/16-18 x 1-3/8	3
15	YBFB10200	BOLT FLANGE, 5/16 X 2 G5	1
16	72246	CLAMP BOLT, 5/16 X 2-3/8”	1
17	70877	WASHER, SHIM .075x1.281 I.D.x2.00O.D.	1
18	YBFB24200	BOLT FLANGE, 3/4 X 2.00 G5	12
19	YNFG10005	NUT FLANGE, 5/16 GF	1
20	YNFG24006	HEX NUT, FLANGED, TOP LOCK, 3/4-10, GG, ZINC	12
21	95368	SHIM	1

FIGURE 5
TANDEMS & TIRES

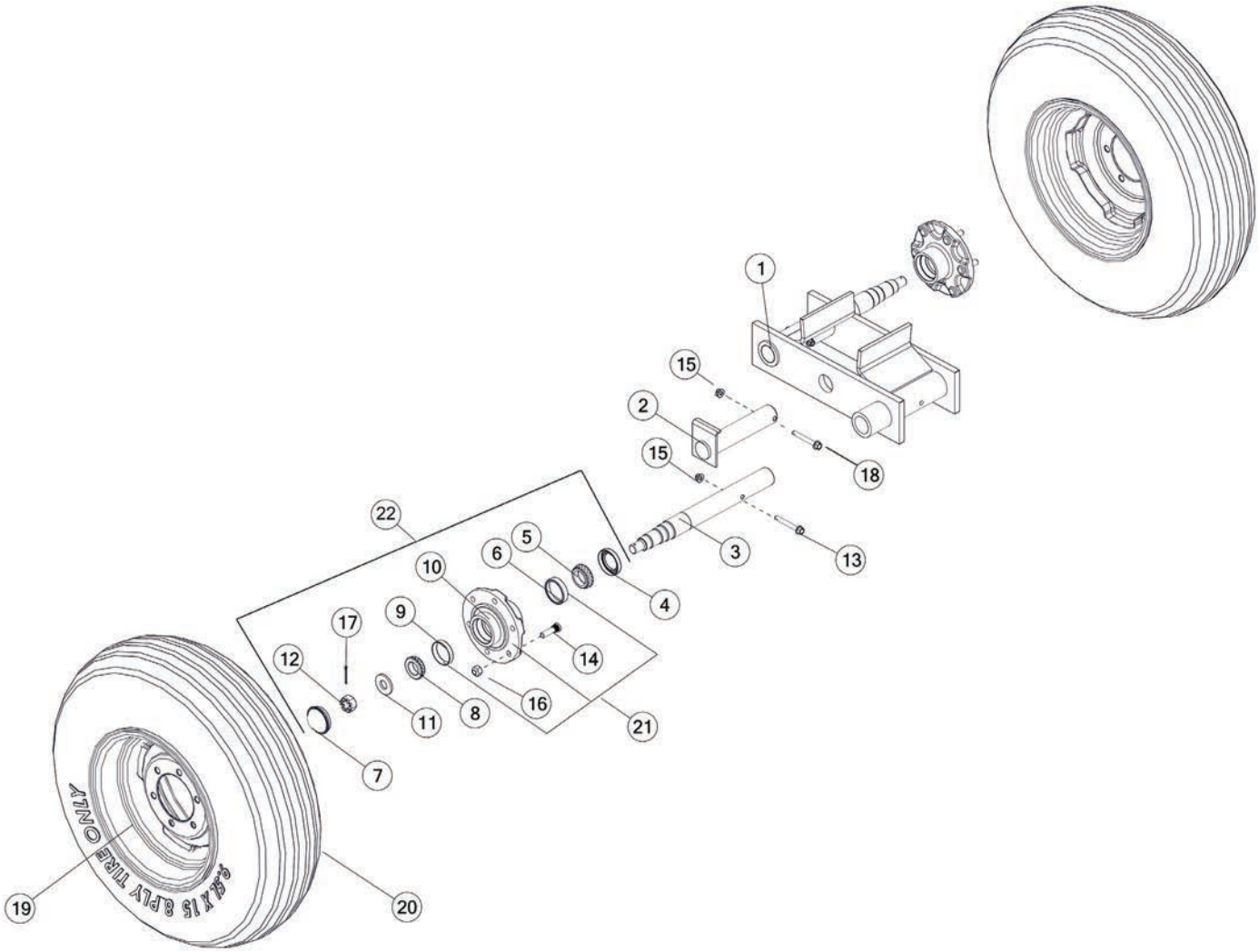

FIGURE 5
TANDEMS & TIRES

REF #	PART #	DESCRIPTION	QTY
1	89117	OSCILLATING TANDEM RH	1
*	89095	OSCILLATING TANDEM LH	1
2	89106	AXLE PIN	2
3	FR55	SPINDLE	4
4	12N17	HUB	4
5	DWM461	TAPER BEARING	4
6	DWM462	INNER RACE	4
7	17G144	HUB CAP	4
8	17G145	ROLLER BEARING	4
9	17G146	OUTER RACE	4
10	58401	HUB	4
11	HD200	ROAD WHEEL SPINDLE WASHER	4
12	YNSL28005	NUT SLOT, 7/8 G2	4
13	YBFB12300	BOLT FLANGE, 3/8 X 3 G5	4
14	YBSD16005	BOLT STUD, 1/2 X 1-7/8 G5	48
15	YNFG12006	NUT FLANGE, 3/8	6
16	YNWL16005	NUT WHEEL, 1/2 G5	48
17	YPCT05010	COTTER PIN, 5/32 X 1-1/2	4
18	YBFB12300	BOLT FLANGE, 3/8 X 3 G5	2
19	12N24	WHEEL, 15 X 8	4
20	85425	TIRE, 240/80R15, RADIAL IMPLEMENT	4
21	RG101	HUB W/RACES AND STUDS	4
22	RG254	HUB COMPLETE	1
*	85423	IF240/80R15IMP TIRE ON 15X8 OFF-WHITE WHEEL	4
*	72436	VALVE STEM	4

FIGURE 6
LINKAGE ARMS & COMPONENTS

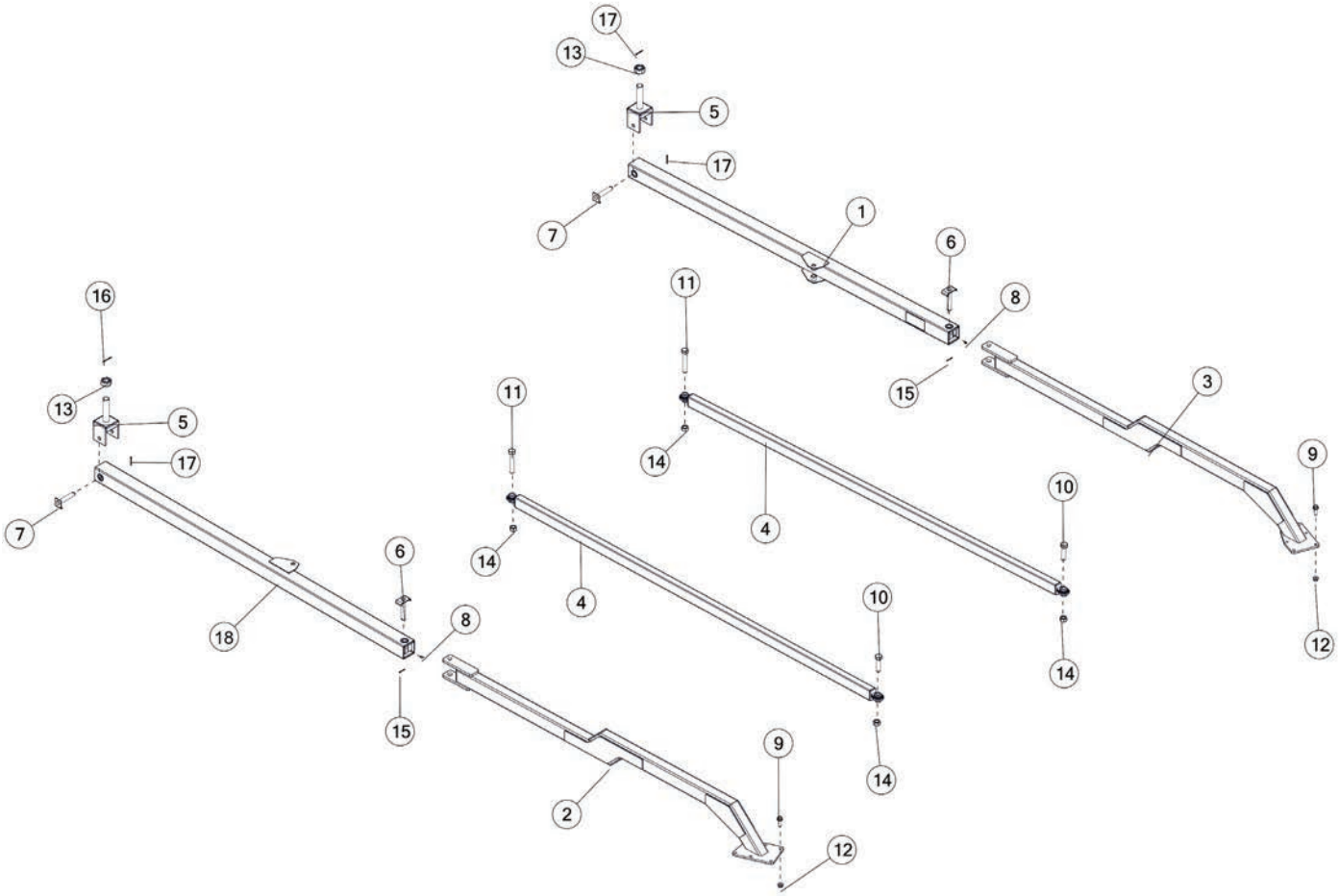

FIGURE 6
LINKAGE ARMS & COMPONENTS

REF #	PART #	DESCRIPTION	QTY
1	82241B1	LINKAGE W/DECAL, BACK LH	1
2	82216	LINKAGE, FRONT RH	1
3	82286	LINKAGE, FRON LH	1
4	BFR458	LINKAGE FRONT	2
5	BFR476	LINKAGE YOKE, BACK	2
6	BFR461	RAKE BEAM ARM PIN	2
7	BFR479	PIVOT YOKE SHAFT PIN	2
8	RG21	ZERK	2
9	YBFB20200	BOLT FLANGE, 5/8 X 2 G5	12
10	YBHH32015	BOLT HEX, 1 X 4 G5	2
11	YBHH32025	BOLT HEX, 1 X 6 G5	2
12	YNFG20005	NUT FLANGE, 5/8	12
13	YNSL40005	NUT SLOT, 1-1/2 G2	2
14	YNTL32005	NUT HEX, 1 LKTL	4
15	YPCT05010	COTTER PIN, 5/32 X 1-1/2	2
16	YPCT05035	COTTER PIN, 5/32 X 2-1/2	2
17	YPCT06020	COTTER PIN, 3/16 X 2	2
18	82241B2	LINKAGE W/DECAL, BACK RH	1

FIGURE 7
MAIN RAKE BEAM ARM RH & COMPONENTS

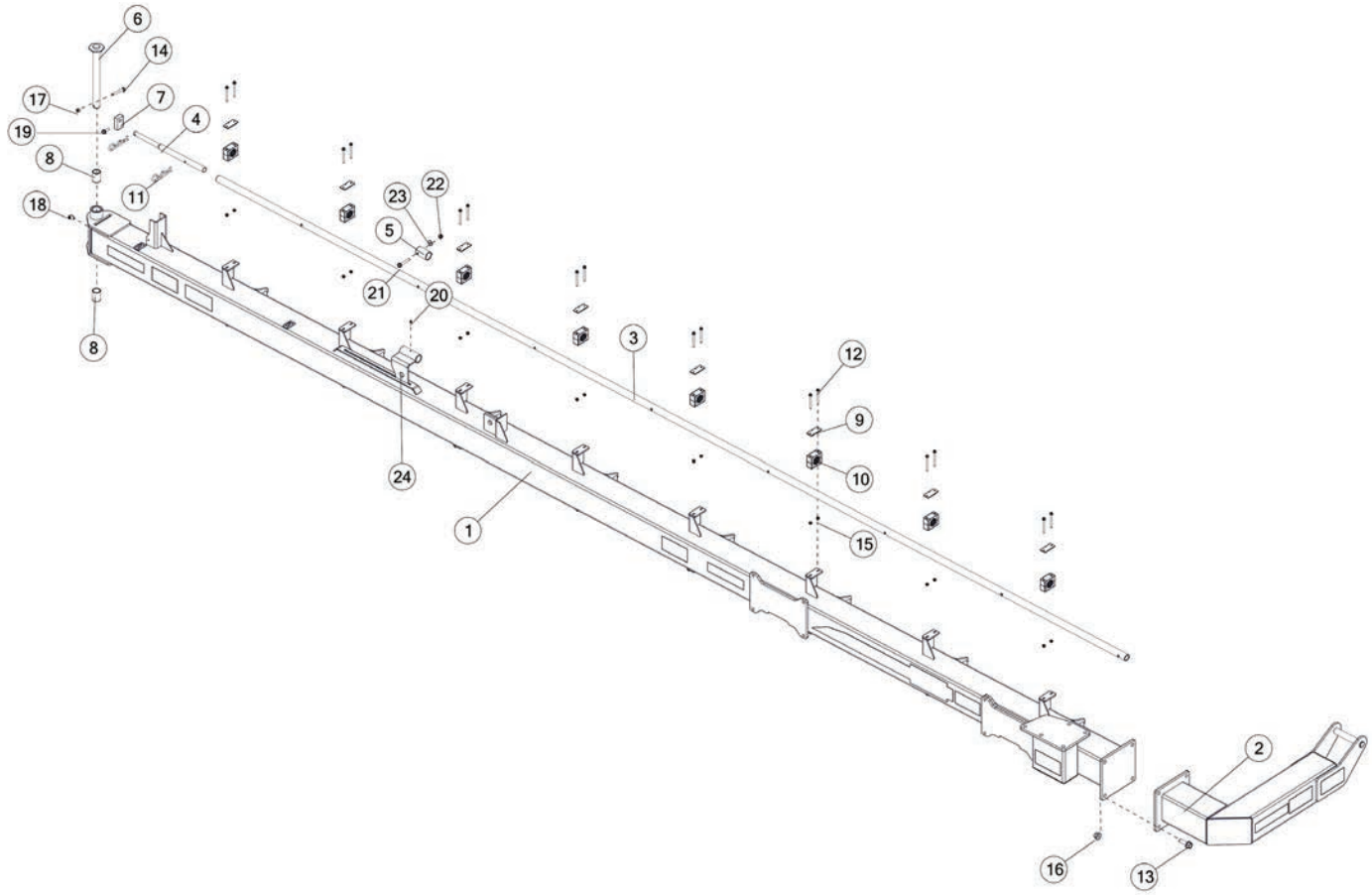

FIGURE 7
MAIN RAKE BEAM ARM RH & COMPONENTS

REF #	PART #	DESCRIPTION	QTY
1	82697B1	RAKE BEAM W/DECAL RH	1
2	82290B	STANDOFF BEAM W/DECAL RH	1
3	81151	LIFTING PIPE RH	1
4	81286	RAKE ARM LOCK-UP SHAFT	1
5	HD175	LIFTING PIPE COLLAR	1
6	FR10	U JOINT PIN	1
7	64103	RAKE PRESSURE HANDLE	1
8	RG132	BUSHING	2
9	56566	HOSE CLAMP COVER	8
10	69113	HOSE CLAMP CUSION	8
11	YPHR08040	HAIR PIN	2
12	YBFB08300	BOLT FLANGE, 1/4 X 3 G5	16
13	YBFB20200	BOLT FLANGE, 5/8 X 2 G5	4
14	YBHH12090	BOLT HEX, 3/8 X 2-1/2 G5	1
15	YNFG08010	NUT FLANGE, 1/4	16
16	YNFG20005	NUT FLANGE, 5/8	4
17	YNTL12005	NUT HEX, 3/8	2
18	DWM133	1/8 PIPE - 45 DEGREE ZERK	1
19	YBFB08005	BOLT FLANGE, 1/4 X 1/2 G5	1
20	MS26	SHORT SHANK ZERK, STRAIGHT	1
21	YBFB12250	BOLT FLANGE, 3/8 X 2-1/2 G5	1
22	YNFG12006	NUT FLANGE, 3/8	1
23	YWFL12005	WASHER FLAT, 3/8	1
24	81149	LIFTING PIPE CYL MOUNT RH	1

FIGURE 8
MAIN RAKE BEAM ARM LH & COMPONENTS

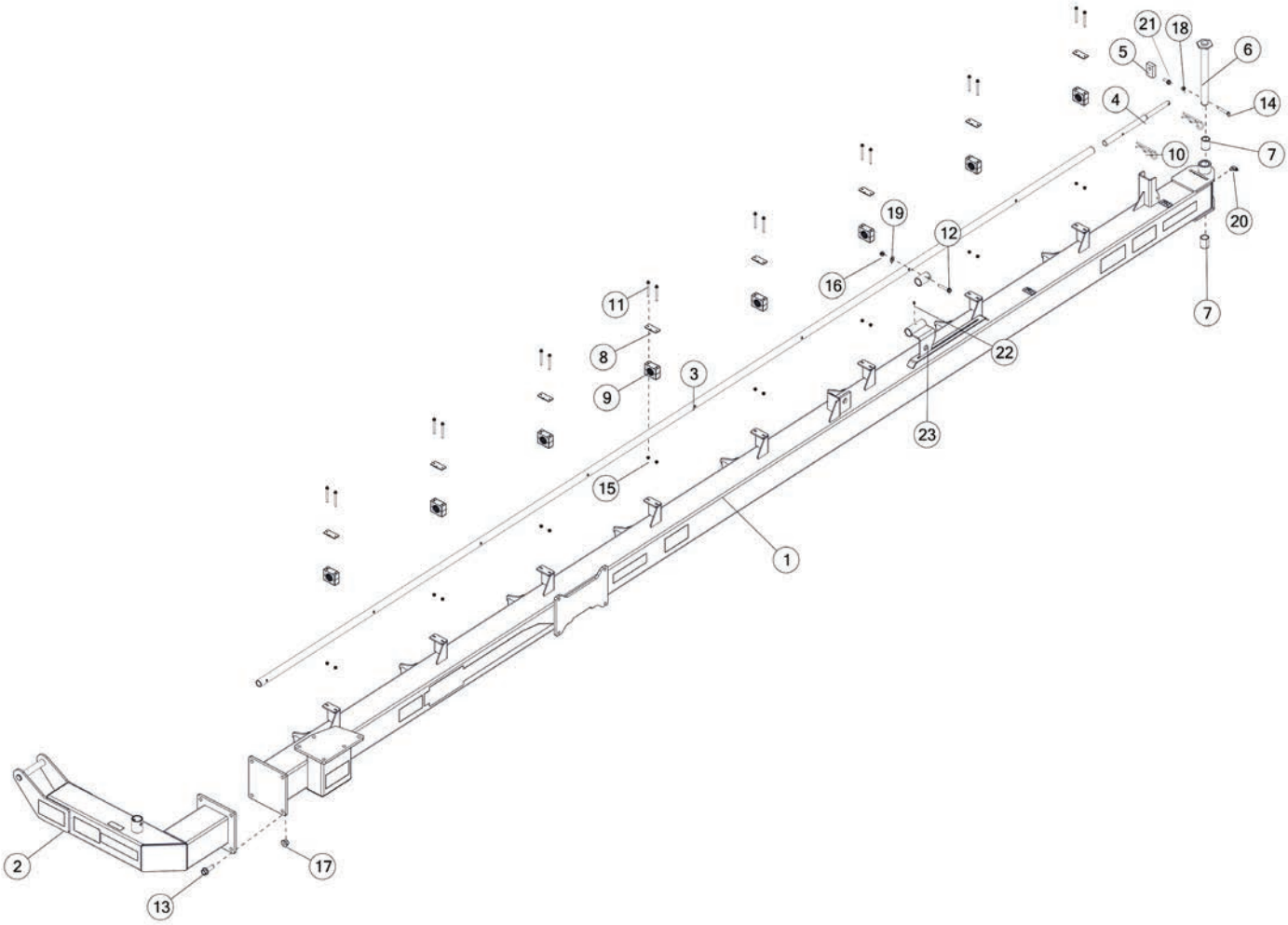

FIGURE 8
MAIN RAKE BEAM ARM LH & COMPONENTS

REF #	PART #	DESCRIPTION	QTY
1	82687B	RAKE BEAM W/DECAL LH	1
2	82292B	STANDOFF BEAM W/DECAL LH	1
3	81151	LIFTING PIPE RH	1
4	81286	RAKE ARM LOCK-UP SHAFT	1
5	64103	RAKE PRESSURE HANDLE	1
6	FR10	U JOINT PIN	1
7	RG132	BUSHING	2
8	56566	HOSE CLAMP COVER	8
9	69113	HOSE CLAMP CUSION	8
10	YPHR08040	HAIR PIN, 1/4 X 5	2
11	YBFB08300	BOLT FLANGE, 1/4 X 3 G5	16
12	YBFB12250	BOLT FLANGE, 3/8 X 2-1/2 G5	1
13	YBFB20200	BOLT FLANGE, 5/8 X 2 G5	4
14	YBHH12090	BOLT HEX, 3/8 X 2-1/2 G5	1
15	YNFG08010	NUT FLANGE, 1/4	16
16	YNFG12006	NUT FLANGE, 3/8	1
17	YNFG20005	NUT FLANGE, 5/8	4
18	YNTL12005	NUT HEX, 3/8	1
19	YWFL12005	WASHER FLAT, 3/8	1
20	DWM133	1/8 PIPE - 45 DEGREE ZERK	1
21	YBFB08005	BOLT FLANGE, 1/4 X 1/2 G5	1
22	MS26	SHORT SHANK ZERK, STRAIGHT	1
23	81314	LIFTING PIPE CYL MOUNT LH	1

FIGURE 9
FRONT CASTER & COMPONENTS

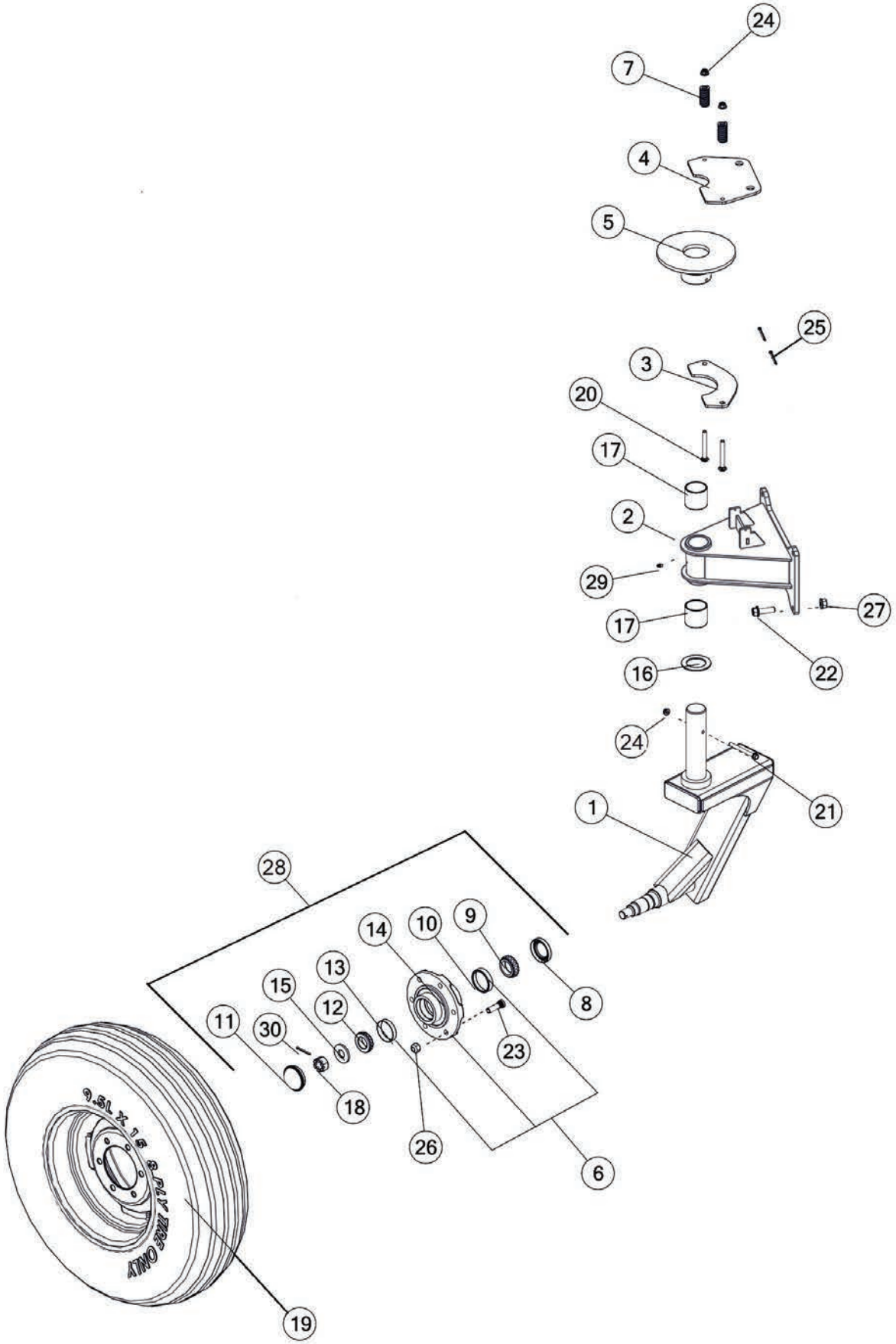

FIGURE 9
FRONT CASTER & COMPONENTS

REF #	PART #	DESCRIPTION	QTY
1	81647	CASTER RH	1
*	81646	CASTER LH	1
2	86838	CASTER MOUNT	1
3	81194	BRAKE PINCHER PLATE TOP	1
4	86835	TOP BRAKE PINCHER PLATE	1
5	81223	BRAKE DISK	1
6	RG101	HUB W/RACES	1
7	WM210	SPRING	2
8	12N17	HUB	1
9	DWM461	INNER BEARING	1
10	DWM462	INNER RACE	1
11	17G144	HUB CAP	1
12	17G145	TAPER BEARING	1
13	17G146	OUTER RACE	1
14	58401	HUB	1
15	HD200	WASHER	1
16	RG24	BRONZE THRUST WASHER	1
17	RG26	BUSHING	2
18	YNSL28005	NUT SLOT, 7/8 G2	1
19	85425	TIRE, 240/80R15, RADIAL IMPLEMENT	1
20	YBCR12080	BOLT CARRIAGE, 3/8 X 3-1/4, G5	2
21	YBHH12160	BOLT HEX, 3/8-16 X 3-3/4 G5 ZC	1
22	YBFB16175	BOLT FLANGE, 1/2 X 1-3/4 G5	4
23	YBSD16005	BOLT STUD, 1/2 X 1-7/8 G5	6
24	YNFG12006	NUT FLANGE, 3/8	3
25	YPCT04020	COTTER PIN, 1/8 X 3/4	2
26	YNWL16005	NUT WHEEL, 1/2 G5	6
27	YNFG16005	NUT FLANGE, 1/2 LKTL	4
28	RG254	HUB COMPLETE	1
29	G89	STRAIGHT ZERK, 1/4-28 X 90	1
30	YPCT05010	COTTER PIN, 5/32 X 1-1/2	1
*	85423	IF240/80R15IMP TIRE ON 15X8 OFF-WHITE WHEEL	1

FIGURE 10
RAKE WHEEL & COMPONENTS

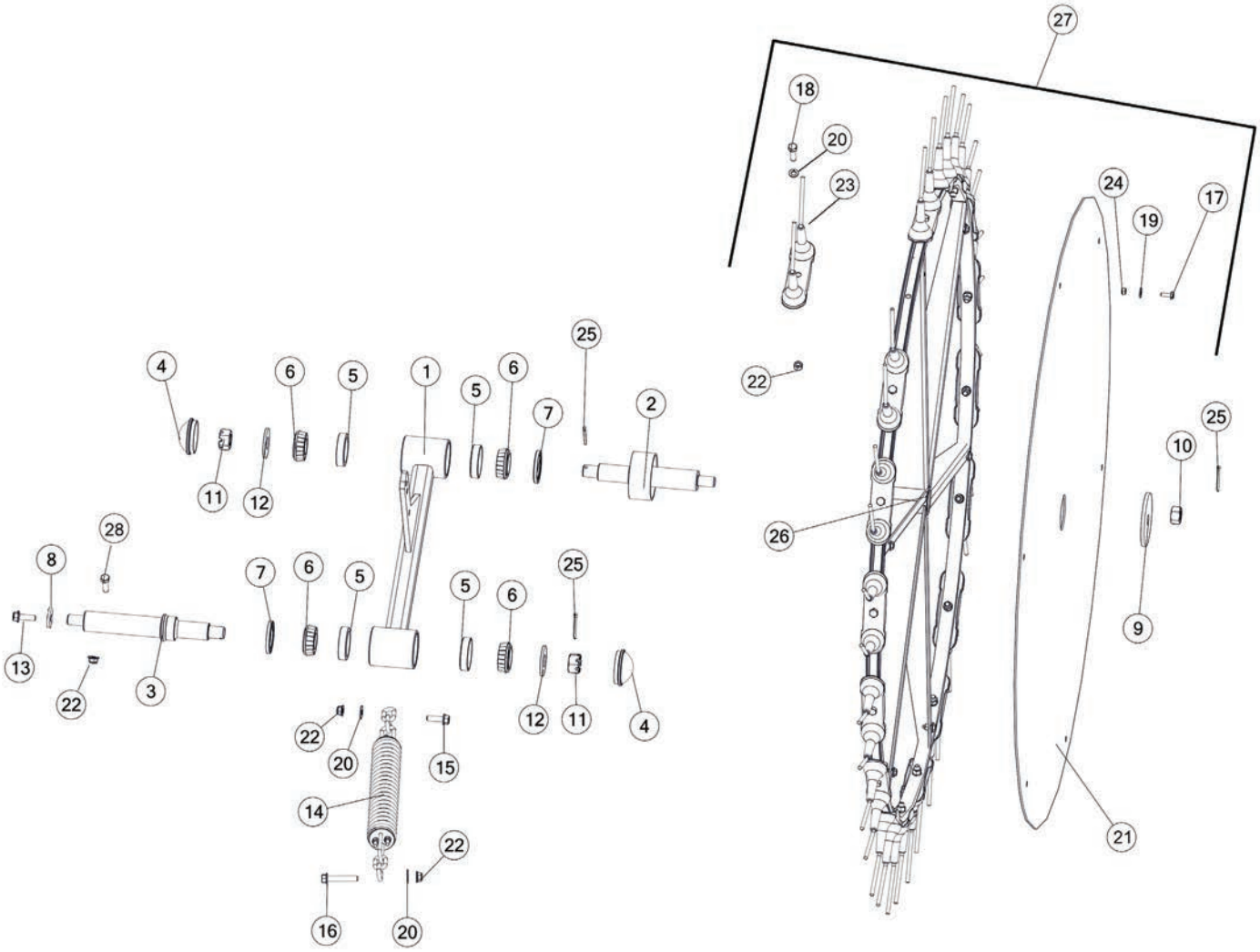

FIGURE 10
RAKE WHEEL & COMPONENTS

REF #	PART #	DESCRIPTION	QTY
1	81271	RAKE ARM	1
2	HD126	RAKE WHEEL SPINDLE	1
3	95035	PIVOT SPINDLE	1
4	57875	HUB CAP	2
5	3G18	RACE	4
6	HD122	TAPER BEARING	4
7	HD124	SEAL	2
8	YWCU99005	WASHER, CUSTOM, FENDER 3/8 X 2”OD	1
9	HD158	SPINDLE WASHER	1
10	YNHX24005	NUT HEX, 3/4	1
11	YNSL28005	NUT SLOT, 7/8 G2	2
12	YWFL28010	WASHER FLAT, 7/8	2
13	YBFB12075	BOLT FLANGE, 3/8 X 3/4 G5	1
14	84181	SPRING, COMPLETE	1
15	YBFB12125	BOLT FLANGE, 3/8 X 1-1/4 G5	1
16	YBFB12225	BOLT FLANGE, 3/8 X 2-1/4 G5	1
17	YBFB08075	BOLT FLANGE, 1/4 X 3/4 G5	6
18	YBFB12125	BOLT FLANGE, 3/8 X 1-1/4 G5	18
19	YWFL08005	WASHER FLAT, 1/4	6
20	YWFL12005	WASHER FLAT, 3/8	20
21	HD118	WIND GUARD	1
22	YNFG12006	NUT FLANGE, 3/8	21
23	58710B	DOUBLE RAKE TOOTH WITH WASHER	1
24	YNFG08010	NUT FLANGE , 1/4 GF	6
25	YPCT05010	COTTER PIN, 5/32 X 1-1/2	3
26	HD117	RAKE WHEEL	1
27	HD204	COMPLETE RAKE WHEEL RH	1
28	YBFB12300	BOLT FLANGE, 3/8 X 3 G5	1
*	HD203	COMPLETE RAKE WHEEL LH	1

FIGURE 11
HYDRAULICS & COMPONENTS

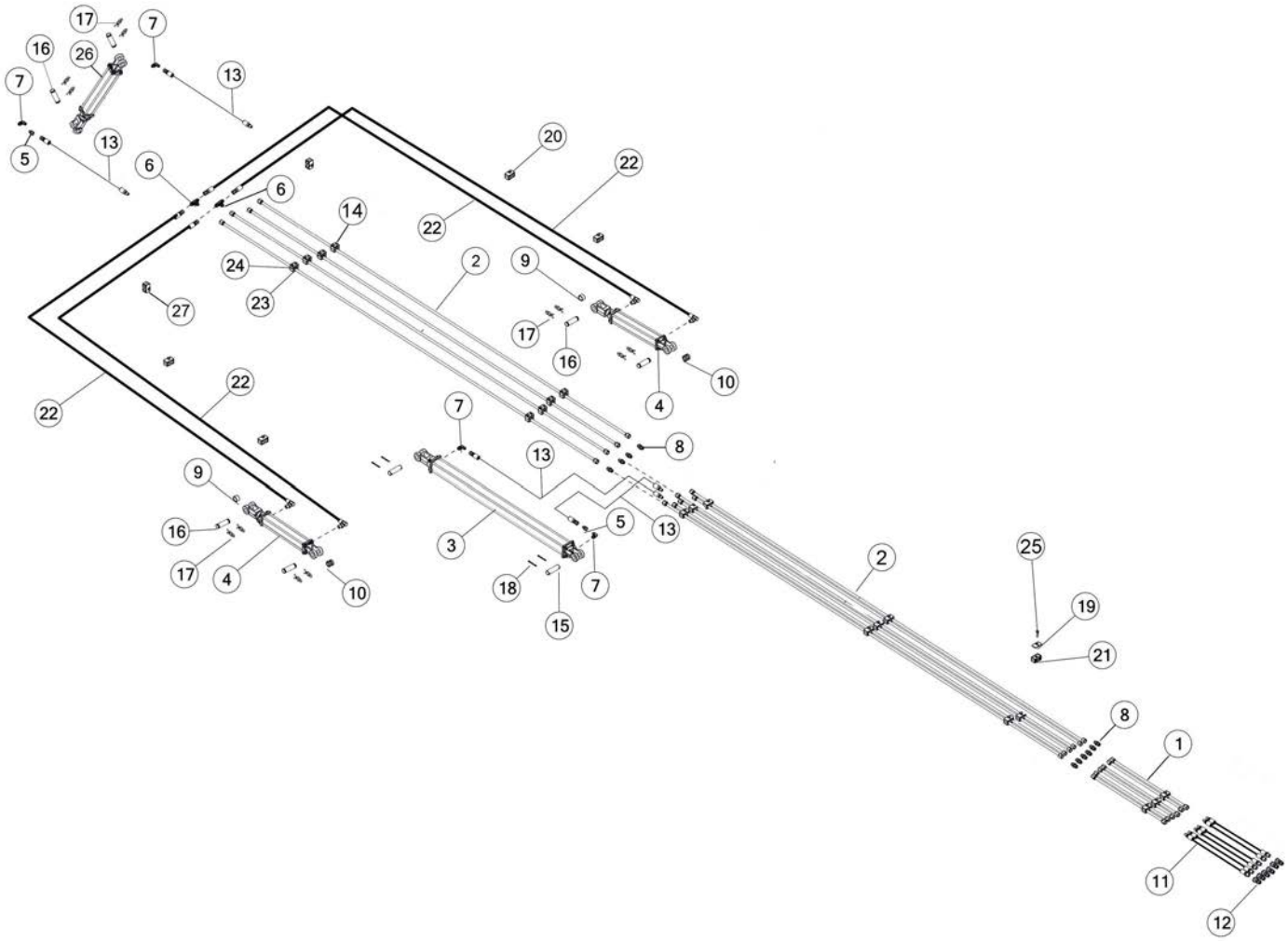

FIGURE 11
HYDRAULICS & COMPONENTS

REF #	PART #	DESCRIPTION	QTY
1	89075	HYDRAULIC TUBE	6
2	82298	HYDRAULIC HARDLINE	10
3	71386	HYDRAULIC CYLINDER	1
4	81290	HYDRAULIC CYLINDER	2
5	58145	ORIFICE, .078	1
6	81311	FITTING, 8 JIC, 8 JIC, 8 JIC, STL	2
7	CHM268	ELBOW	4
8	GM17	ADAPTER	10
9	HD187	SPACER, 3/4 X 1	2
10	X94	SPACER	2
11	81231	HYDRAULIC HOSE	6
12	67148	QUICK COUPLER TIP	6
13	81229	HYDRAULIC HOSE	4
14	YBHH08070	BOLT HEX, 1/4 X 2-3/4 GS	8
15	BFR634	CYLINDER PIN	2
16	T143	CYLINDER PIN	6
17	YPHR02020	HAIR PIN, #23-10	12
18	YPCT06020	COTTER PIN, 3/16 X 2	4
19	56563	CLAMP TOP PLATE	17
20	56568	CLAMP BOLT, 5/16 X 1-3/8	7
21	TS118	LINE CLAMP BLOCK	16
22	81322	HOSE	4
23	56624	HOSE CLAMP CUSION	8
24	56565	CLAMP COVER	4
*	TFM83	90 DEGREE ELBOW	4
25	72246	CLAMP BOLT, 5/16 X 2-3/8	9
26	71743	CYLINDER	1
27	CHM278	TWO LINE CLAMP BLOCK, 3/8	10
*	56188	SEAL KIT	1

FIGURE 12
OPEN CYLINDER

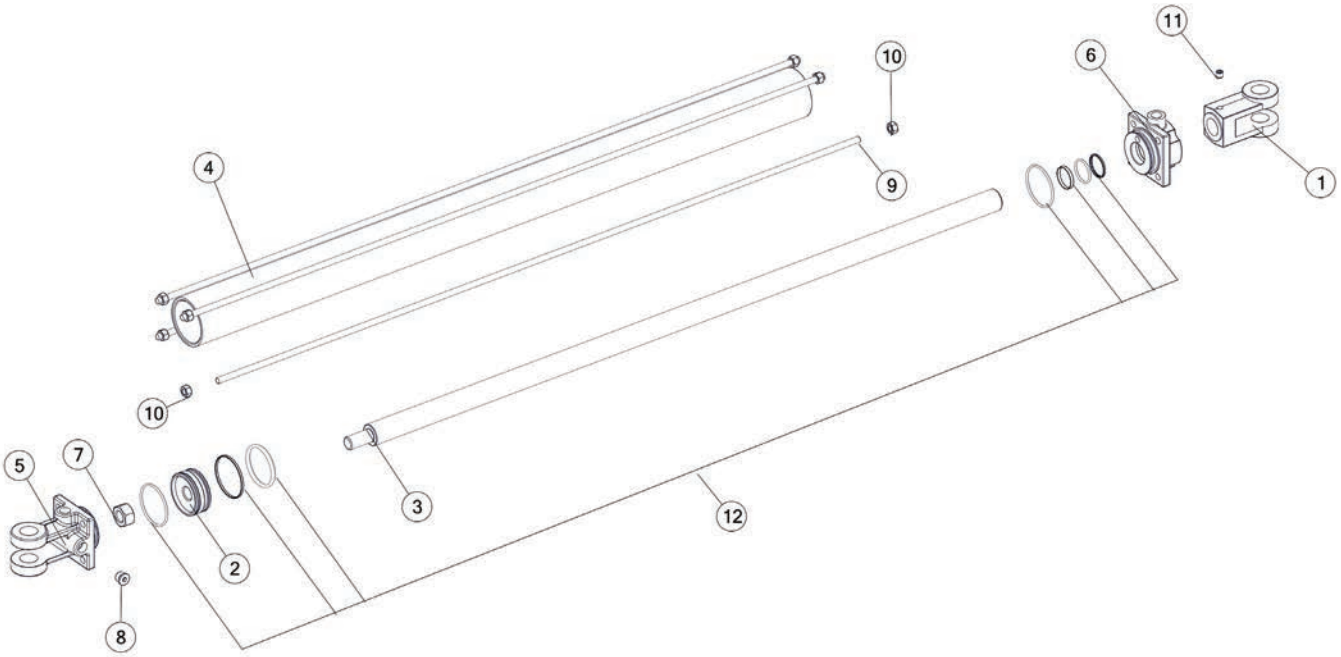

REF #	PART #	DESCRIPTION	QTY
1	23N150A	ROD CLEVIS	1
2	56181	PISTON	1
3	71386	HYDRAULIC CYLINDER	1
4	60627	CYLINDER TUBE	1
5	71387	CLEVIS CAP	1
6	71386	HYDRAULIC CYLINDER	1
7	23N148	PISTON NUT	1
8	71261	PLUG, #6 ORB	4
9	BFR656	TIE ROD	8
10	YNHX12006	NUT HEX, 3/8 G2	1
11	YSSO12015	SCREW SET, SOCKET, 3/8 X 3/8	1
12	58687	SEAL KIT	1
*	71386	CYLINDER	

FIGURE 13
LIFT CYLINDER

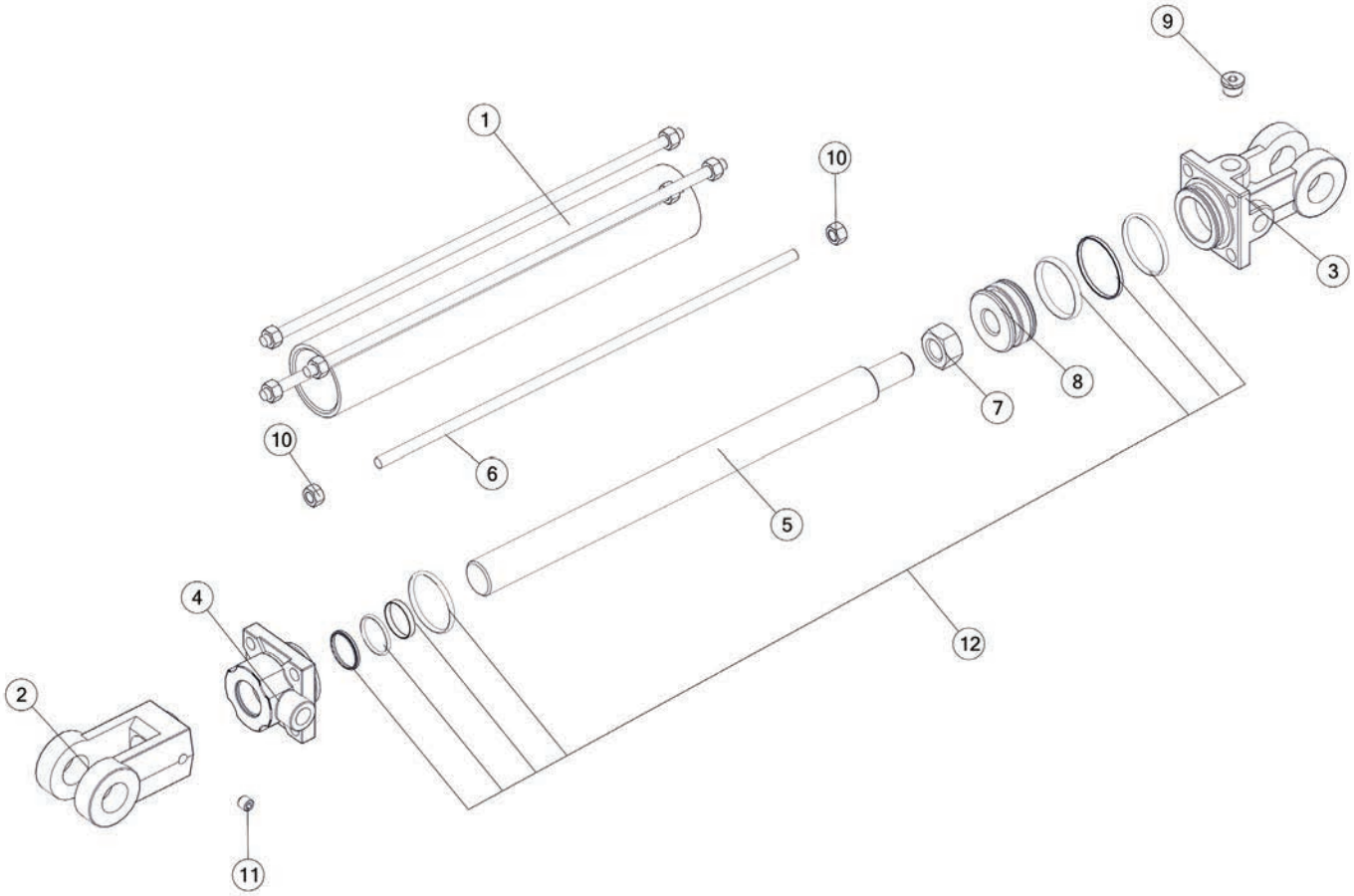

REF #	PART #	DESCRIPTION	QTY
1	56451	CYLINDER TUBE	1
2	23N150A	ROD CLEVIS	1
3	66932	CLEVIS CAP	1
4	66934	ROD CAP	1
5	56452	CYLINDER ROD	1
6	56453	CYLINDER TIE ROD	4
7	23N148	PISTON NUT	1
8	56180	PISTON	1
9	SD270	HOLLOW HEX PLUG	1
10	YNHX12006	NUT HEX, 3/8 G2	8
11	YSSO12015	SCREW SET, SOCKET, 3/8 X 3/8	1
12	56187	SEAL KIT	1
*	81290	CYLINDER	1

FIGURE 14
OPTIONAL 2-WHEEL EXTENSION

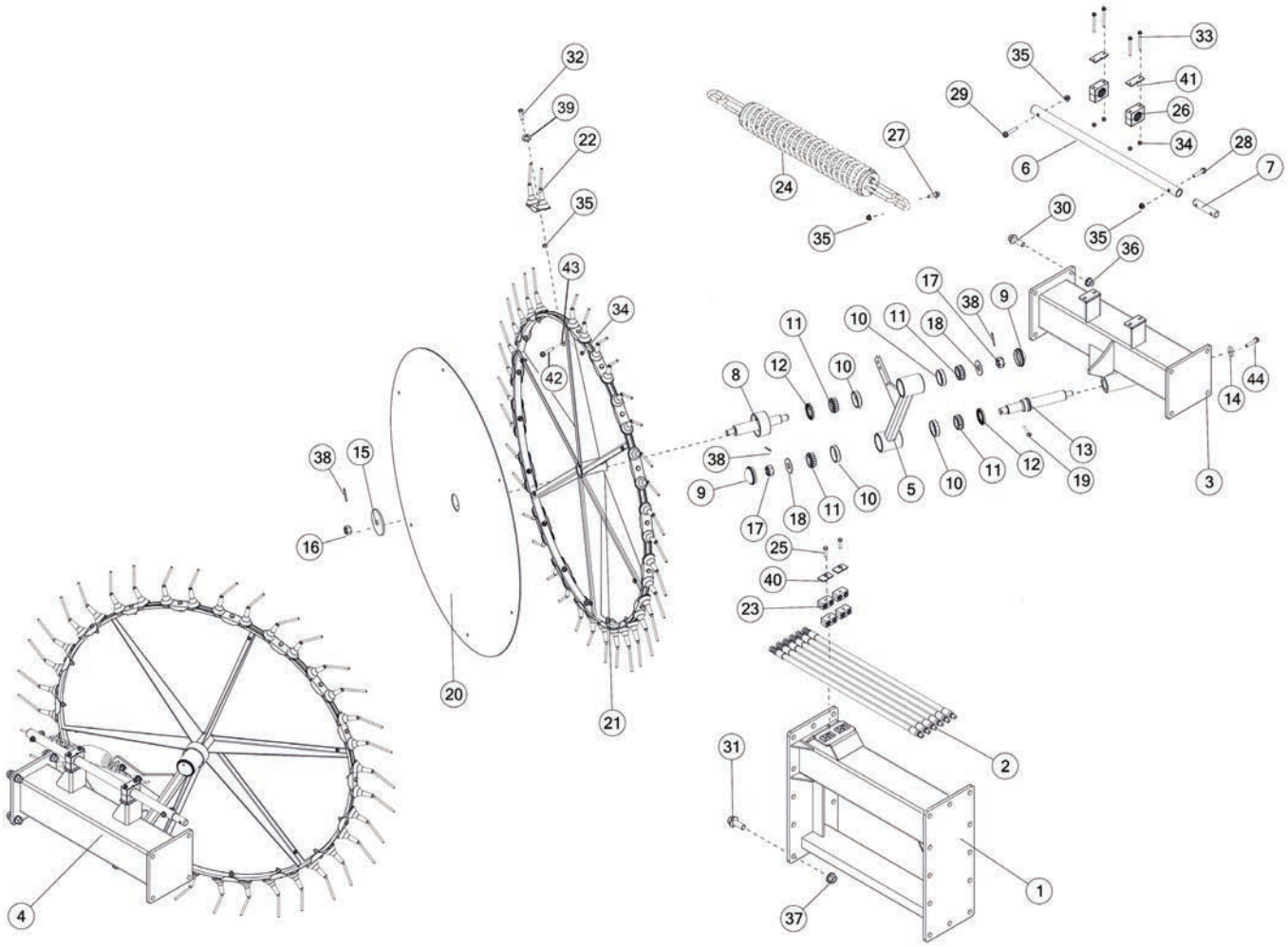

REF #	PART #	DESCRIPTION	QTY
1	82836	POLE, FRONT	1
2	82849	HYDRAULIC HOSE	6
3	82825	EXTENTION RH	1
4	82822	EXTENTION LH	1
5	81271	RAKE ARM	2
6	82833	LIFTING PIPE	2
7	82834	EXTENTION PIN	2
8	HD126	RAKE WHEEL SPINDLE	2
9	57875	HUB CAP	2

FIGURE 14
OPTIONAL 2-WHEEL EXTENSION

REF #	PART #	DESCRIPTION	QTY
10	3G18	RACE	8
11	HD122	TAPER BEARING	8
12	HD124	SEAL	4
13	95035	PIVOT SPINDLE	2
14	YWCU99005	WASHER, CUSTOM, FENDER 3/8 X 2 OD	2
15	HD158	SPINDLE WASHER	2
16	YNSL24005	NUT HEX, SLOTTED, 3/4 G2	2
17	YNSL28005	NUT SLOT, 7/8 G2	4
18	YWFL28010	WASHER FLAT, 7/8	4
19	YBFB12300	BOLT FLANGE, 3/8 X 3 G5	2
20	HD118	POLY	2
21	HD117	RAKE WHEEL	2
22	58710B	DOUBLE RAKE TOOTH WITH WASHER	36
23	CHM278	HOSE CLAMP	4
24	84181	COMPLETE SPRING ASSEMBLY	2
25	72246	CLAMP BOLT 5/16 X 2-3/8	2
26	69113	HOSE CLAMP CUSHION	4
27	YBFB12125	BOLT FLANGE, 3/8 X 1-1/4 G5	2
28	YBFB12200	BOLT FLANGE, 3/8 X 2 G5	2
29	YBFB12225	BOLT FLANGE, 3/8 X 2-1/4 G5	2
30	YBFB20200	BOLT FLANGE, 5/8 X 2 G5	8
31	YBFB24200	BOLT FLANGE, 3/4 X 2 G5	12
32	YBFB12125	BOLT FLANGE, 3/8 X 1-1/4 G5	36
33	YBFB08300	BOLT FLANGE, 1/4 X 3 G5	8
34	YNFG08010	NUT FLANGE, 1/4 GF	12
35	YNFG12006	NUT FLANGE, 3/8	42
36	YNFG20005	NUT FLANGE, 5/8	8
37	YNFG24006	NUT HEX TOP LOCK, 3/4	12
38	YPCT05010	COTTER PIN 5/32 X 1-1/2	4
39	YWFL12005	WASHER FLAT, 3/8	36
40	56563	CLAMP TOP PLATE	2
41	56566	HOSE CLAMP COVER	4
42	YBFB08075	BOLT FLANGE, 1/4 X 3/4 G5	12
43	YWFL08005	WASHER, FLAT, 1/4	12
44	YBFB12075	BOLT FLANGE, 3/8 X 3/4 G5	2
*	HD204	RAKE WHEEL, COMPLETE RH	1
*	HD203	RAKE WHEEL, COMPLETE LH	1

FIGURE 15
OPTIONAL 2-POINT HITCH

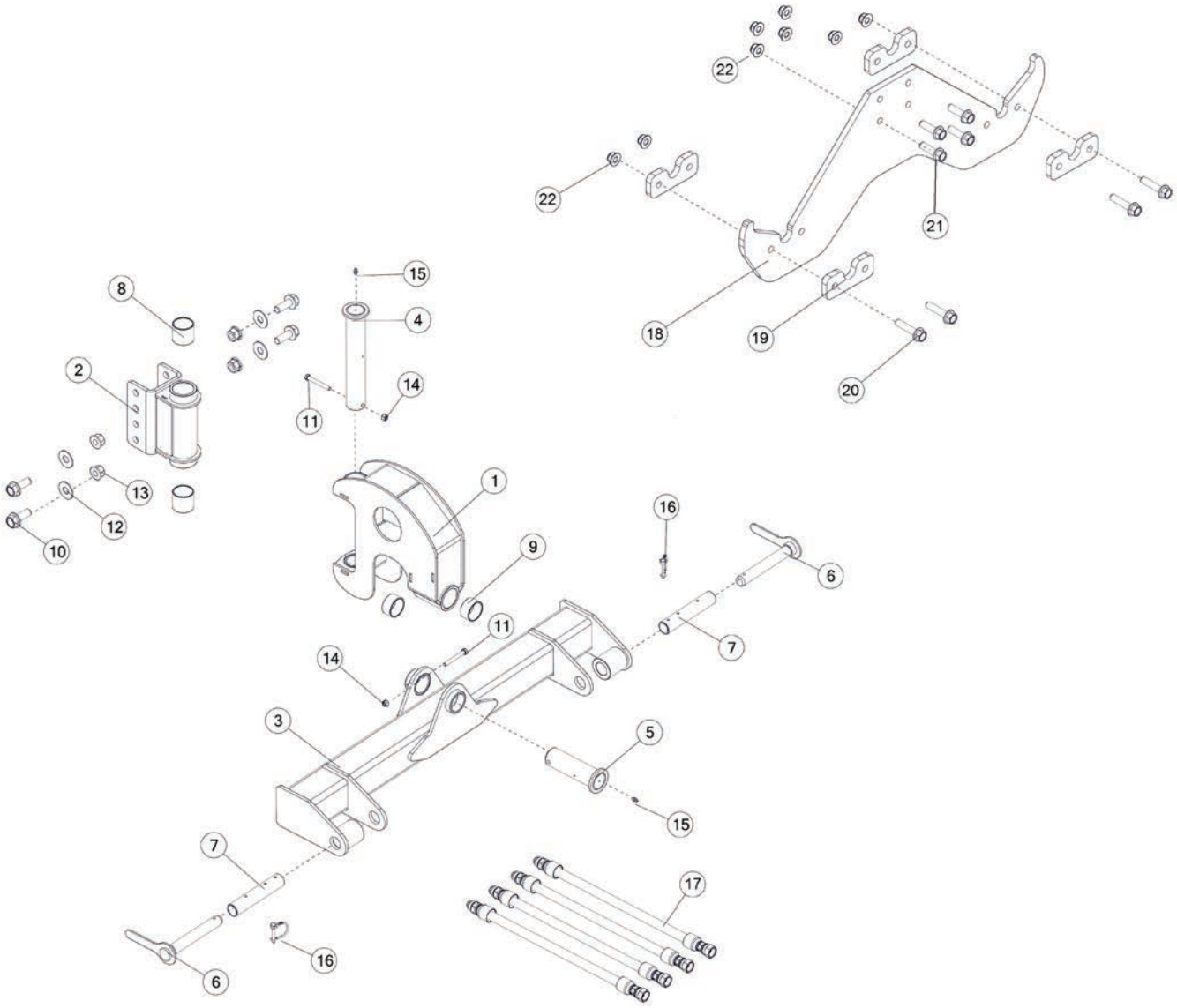

FIGURE 15
OPTIONAL 2-POINT HITCH

REF #	PART #	DESCRIPTION	QTY
1	86710	PIVOT ASSY, HITCH	1
2	86718	HINGING HITCH MOUNT	1
3	86701	TWO POINT HITCH	1
4	86715	HITCH PIVOT PIN, LONG	1
5	86705	HITCH PIVOT PIN, SHORT	1
6	PTMWE65	HITCH PIN	2
7	PTMTU56	CAT 3 ADAPTER TUBE	2
8	RG26	BUSHING, STEEL, 2.015 ID X 2.25 OD X 2 LONG	1
9	72652	BRONZE BUSHING	1
10	YBFB24200	BOLT FLANGE, 3/4 X 2.00 G5	1
11	YBHH12125	BOLT HEX, 3/8-16 X 3 GR 5 FULL THREAD	2
12	YWFL24005	WASHER, FLAT, 3/4 USS	1
13	YNFG24006	NUT, FLANGE, 3/4-10, LKTL, G, ZC	1
14	YNTL12005	NUT, HEX, 3/8-16, LKTL, C, ZC	2
15	G89	STRAIGHT ZERK 1/4-28X90	2
16	DWM324	SNAPPER PIN	2
17	89390	HYDRAULIC HOSE, 6, 18	1
18	86620	AUTO LATCH HOOK	1
19	83394	HOOK WEAR PLATE	1
20	YBFB16225	BOLT FLANGE, 1/2 X 2-1/4 G5	4
21	YBFB16175	BOLT FLANGE, 1/2 X 1-3/4 G5	4
22	YNFG16003	NUT FLANGE, 1/2	8

FIGURE 16
OPTIONAL CORN STALK BREAKER

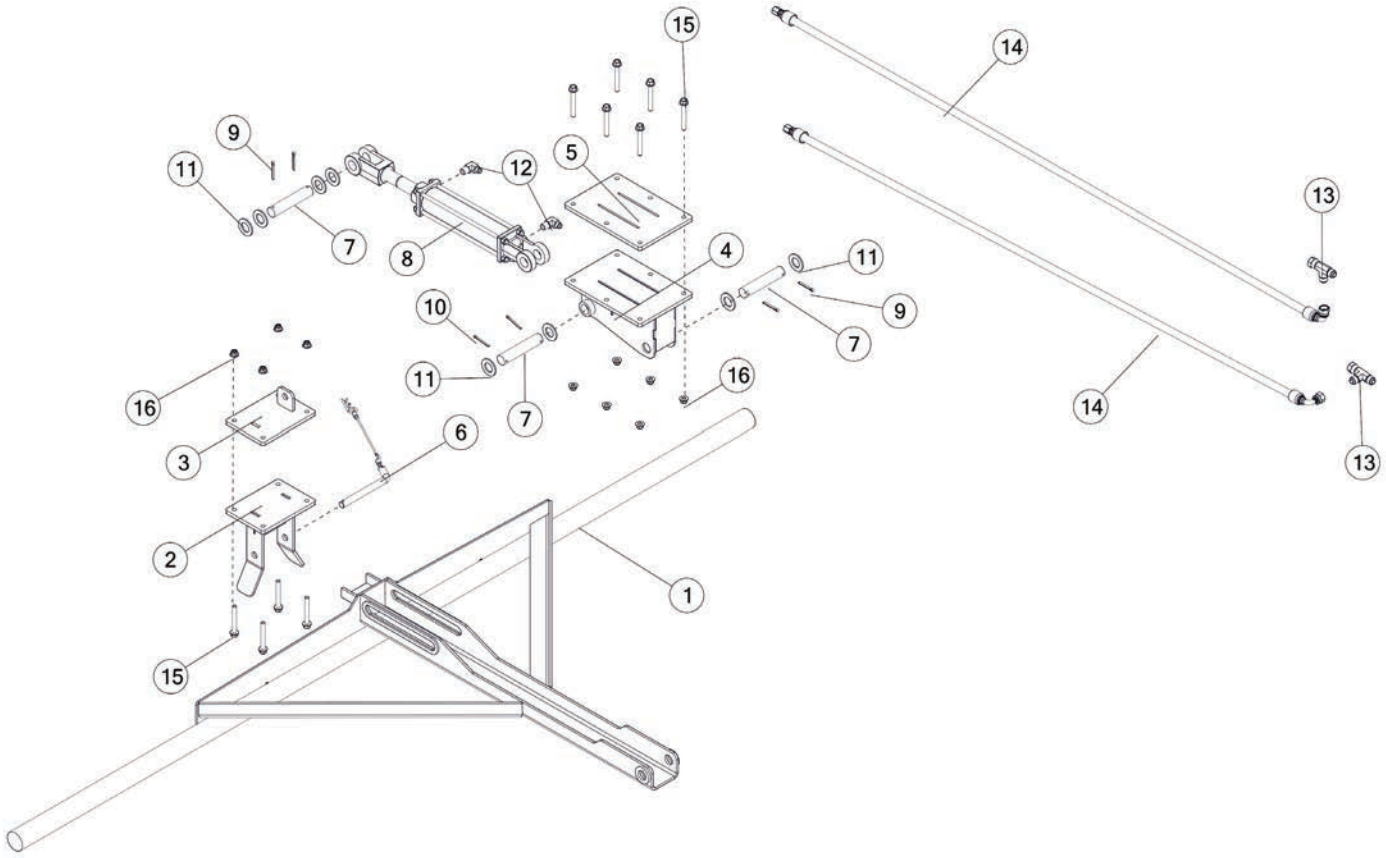

FIGURE 16
OPTIONAL CORN STALK BREAKER

REF #	PART #	DESCRIPTION	QTY
1	86285	STALKER ARM	1
2	86286	LOCK MOUNT	1
3	86287	LOCK TOP PLATE	1
4	86284	MOUNT WELDMENT	1
5	86252	MOUNT PLATE	1
6	10ERAS01	ARM SLIDER PIN ASSEMBLY	1
7	LW237	CYLINDER PIN	3
8	55999	CYLINDER, 2 X 8 3000 PSI	1
9	YPCT06005	COTTER PIN, 3/16 X 1-1/2	4
10	YPCT05010	COTTER PIN 5/32” X 1-1/2”	2
11	16SV136	WASH FLAT, 1.75 X 1.02 X 0.13 ZC	8
12	CHM164	FITTING, 90, 6JIC X 3/8NPT	2
13	63336	FITTING, TEE, 8JIC X 8JIC X 8JIC	2
14	88301	HYDRAULIC HOSE, 8, 72 IN	2
15	YBFB12300	BOLT FLANGE, 3/8 X 3 G5	10
16	YNFG12006	NUT FLANGE, 3/8 GF	10

FIGURE 17
OPTIONAL KICKER WHEEL

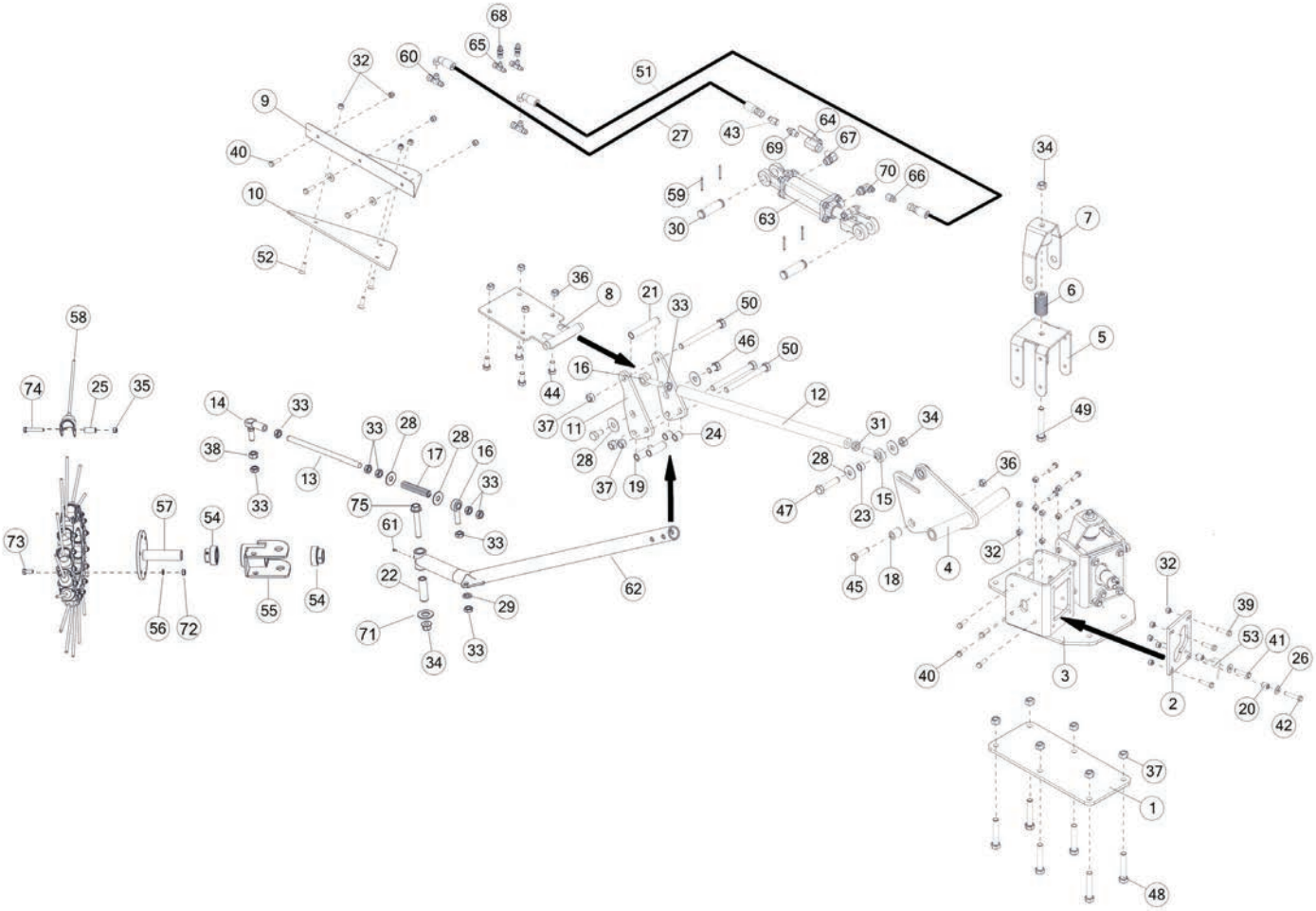

FIGURE 17
OPTIONAL KICKER WHEEL

REF #	PART #	DESCRIPTION	QTY
1	71496	PLATE	1
2	71526	PLATE	2
3	71486	KICKER MAIN	1
4	71495	KICKER BELL	1
5	71500	SPRING BASE BRACKET	2
6	71574	DIE SPRING	2
7	71534	SPRING YOKE	2
8	71521	PIVOT	1
9	71185	KICKER DEFLECTOR BRACKET	1
10	71192	POLY DEFLECTOR PANEL, 1/4	1
11	71522	PLATE	2
12	71601	TUBE	1
13	71618	ALLTHREAD, 5/8 X 12.5	1
14	71599	BALL JOINT BEARING, 5/8	1
15	71593	ROD END BEARING, 5/8 LH	1
16	71594	ROD END BEARING RH	2
17	71296	SPRING	1
18	71487	BUSHING	1
19	71548	STEEL BUSHING	2
20	71568	TUBE	2
21	71577	STEEL BUSHING	1
22	93655	CYLINDER SPACER	1
23	71605	STEEL BUSHING	1
24	71536	STEEL BUSHING	2
25	70807	TUBE	15
26	YWFL12005	WASHER FLAT, 3/8	2
27	90544	HYDRAULIC HOSE, 6 X 162	1
28	YWFL20005	WASHER FLAT, 5/8	6
29	YWLO20005	WASHER LOCK, 5/8	1
30	T143	CYLINDER PIN	1
31	YNJM20011	NUT HEX, 5/8 G5	1
32	YNFG12006	NUT FLANGE, 3/8	24
33	YNJM20010	NUT HEX, JAM, 5/8	8
34	YNFG10005	NUT FLANGE, 5/16 GF	3
35	YNTL12005	NUT HEX, TOP LOCK, 3/8	15
36	YNFG16003	NUT FLANGE, 1/2 GF	5
37	YNTL20005	NUT HEX, TOP LOCK, 5/8	9
38	YNHX20008	NUT, HEX, 5/8-18, NA, A, ZC	1
39	YBFB12150	BOLT FLANGE, 3/8 X 1-1/2	6
40	YBFB12125	BOLT FLANGE, 3/8 X 1-1/4 G5	11
41	YBFB12175	BOLT FLANGE, 3/8 X 1-3/4 G5	2

FIGURE 17
OPTIONAL KICKER WHEEL

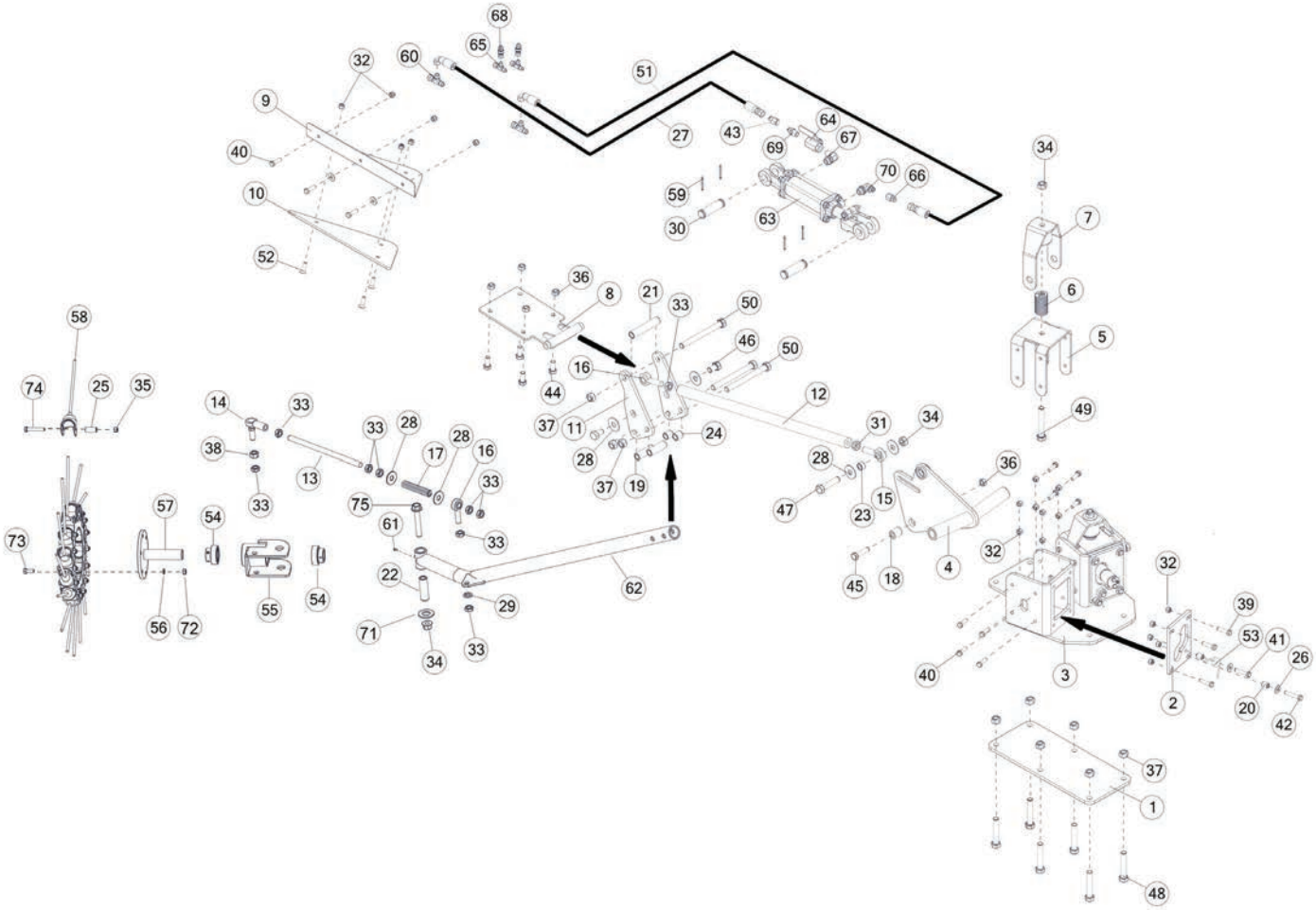

FIGURE 17
OPTIONAL KICKER WHEEL

REF #	PART #	DESCRIPTION	QTY
42	YBFB12225	BOLT FLANGE, 3/8 X 2-1/4 G5	2
43	90534	IN-LINE CONNECTOR, ORIFICE, 4-XHX7-S .022	1
44	YBFB16150	BOLT FLANGE, 1/2 X 1-1/2 G5	4
45	YBFB16200	BOLT FLANGE, 1/2 X 2 G5	1
46	YBHH20005	BOLT HEX, 5/8 X 1 G5	2
47	YBHH20045	BOLT HEX, 5/8 X 2-3/4 G5	1
48	YBFB20350	BOLT FLANGE, 5/8 X 3-1/2 G5	6
49	YBHH20065	BOLT HEX, 5/8 X 4 G5	2
50	YBHH20103	BOLT HEX, 5/8 X 6-1/2 G5	3
51	71780	HYDRAULIC HOSE, 6, 201IN	1
52	YSFS12005	SCREW FLAT, HEAD SOCKET CAP, 3/8 X 1-1/4	3
53	71570	TORSION SPRING	2
54	BFR525	BEARING W/LOCK COLLAR	2
55	93653	RAKE HUB PIVOT	1
56	YWLO76015	WASHER LOCK, M10	6
57	93650	RAKE WHEEL HUB	1
58	T82	RUBBER MOUNTED TOOTH	15
59	YPCT05010	COTTER PIN 5/32 X 1-1/2	4
60	CHM242	TEE SWIVEL RUN	2
61	MS26	SHORT SHANK ZERK (STRAIGHT)	1
62	71529	CENTER POLE	1
63	70797	HYD CYL, 10.2 X 14.2	1
*	72160	CYLINDER TIE ROD	1
*	72161	SEAL KIT	1
64	16SV338	BALL VALVE, 3/8	1
65	58101	FITTING 4 R6X-S	2
66	58142	FITTING, 6 XHX7-S .031 ORIFICE	1
67	70158	FITTING, 90, 3/4ORB, 3/8NPT, STL	1
68	71802	FITTING, ST, 6 MALE JIC, 4 FEMALE JIC STL	2
69	58124	FITTING STRAIGHT, 04JIC, 06NPT	1
70	CHM206	FITTING, 90, 6JIC X 8ORB	1
71	YWFL32005	WASHER, FLAT, SAE 1	1
72	YNHX76015	NUT HEX, M10-1.5	6
73	YBHH76015	BOLT HEX, M10-1.5 X 25	6
74	YBHH12100	BOLT HEX, 3/8 X 2-1/4 G5	15
75	YBFB20400	BOLT FLANGE, 5/8 X 4 G5	1

FIGURE 17
OPTIONAL KICKER WHEEL

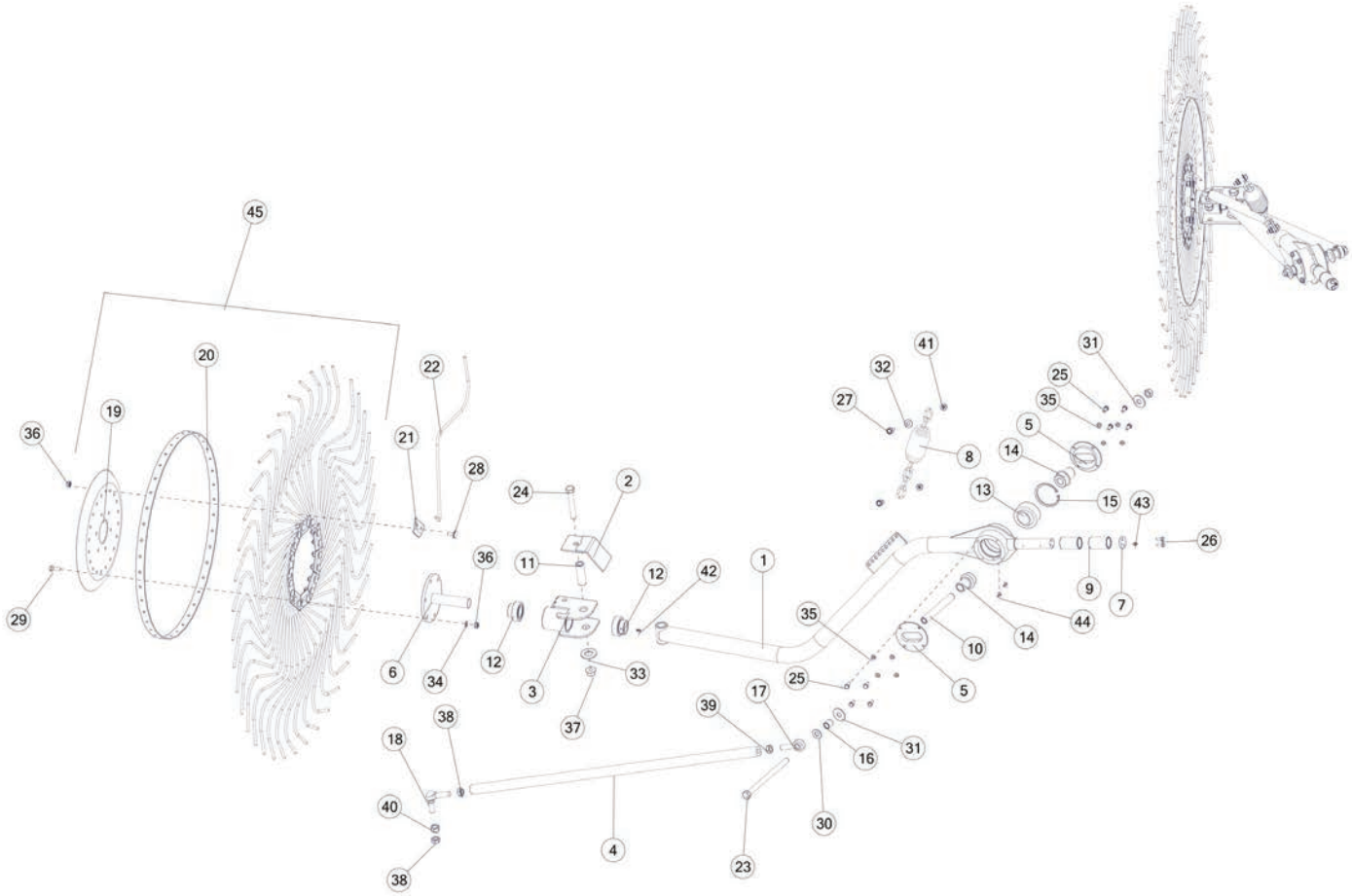

REF #	PART #	DESCRIPTION	QTY
1	71558	RIGHT POLE	1
*	71560	LEFT POLE	1
2	85319	RAMP BRACKET	2
3	93653	RAKE HUB PIVOT	2
4	71600	TIE ROD	2
5	71562	PLT 4.25 X 0.50, KICKER GUIDE	4
6	93650	RAKE WHEEL HUB	2
7	71993	PLT, 1.50 X 1.50 X 0.25, KEEPER	2
8	8771	RAKE WHEEL SPRING	2
9	71563	BSH, 1.50 X 1.25 X 2.47	4
10	71535	BSH, .875 X .635 X 6.374	2

FIGURE 17
OPTIONAL KICKER WHEEL

REF #	PART #	DESCRIPTION	QTY
11	93655	CYLINDER SPACER	2
12	BFR525	PEER FHR206-20 BEARING 1-1/4”	4
13	71553	BRG, 3.125 X 1.75 X 1.56	2
14	71550	BSH, 2.08 X 0.89 X 2.44, STL	4
15	71608	SNAP RING	2
16	71536	BSH, 0.88 X 0.66 X 0.88, STL	2
17	71593	BRG, 5/8 ROD END LH	2
18	71598	BRG, BALL JOINT 5/8-18 M	2
19	FR71	RAKE WHEEL CENTER 60 IN BLACK	2
20	T177A	OUTER RING FOR 48” RAKE WHEEL	2
21	FR74	RAKE TOOTH CLIP BLACK	20
22	10WR42	RAKE WHEEL TOOTH, 49”, BLACK	80
23	YBHH20120	BOLT, 5/8-11 X 9” GR 5	2
24	YBHH20067	BOLT, 5/8-11 X 4-1/4 GR 5, ZINC	2
25	YBHH10105	BOLT, 5/16 X 3/4 GR 5	16
26	YBHH08102	BOLT, 1/4 X 3/4 GR 8, YELLOW ZINC	4
27	YBFB12150	BOLT FLANGE, 3/8 X 1-1/2 G5	1
28	YBCR76005	BOLT, CARR, M10-1.5 X 25MM, 8.8, NF	40
29	YBHH76015	BOLT, HEX, M10-1.5 X 25, 10.9, ZC	12
30	YWFL20010	WASHER, FLAT, 5/8” SAE GR 8 YELLOW ZINC	2
31	YWFL20005	WASHER, FLAT, 5/8 USS	4
32	YWFL12005	WASHER, FLAT, 3/8 USS	2
33	YWFL32005	WASHER, FLAT, SAE 1.00, ZINC	2
34	YWLO76015	WASHER, LOCK, M10	12
35	YWLO10005	WASHER, LOCK, 5/16	16
36	YNHX76015	NUT, HEX, M10-1.5, NA, CL10, ZC	32
37	YNFG20005	NUT, FLANGE, 5/8-11, LKTL, F, ZC	2
38	YNJM20010	NUT JAM, 5/8 A	4
39	YNJM20011	NUT JAM, 5/8 G5 LH	2
40	YNHX20008	NUT, HEX, 5/8-18, NA, A, ZC	2
41	YNFG12006	NUT FLANGE, 3/8 GF	8
42	MS26	1/4”-28 STRAIGHT ZERK	2
43	G89	1/4”-28 STRAIGHT ZERK	2
44	RG51	ZERK, 90 DEGREE 1/4”-28	4
45	10WR17	LH RAKE WHEEL, 49” DIAMETER, BLACK	2

FIGURE 18

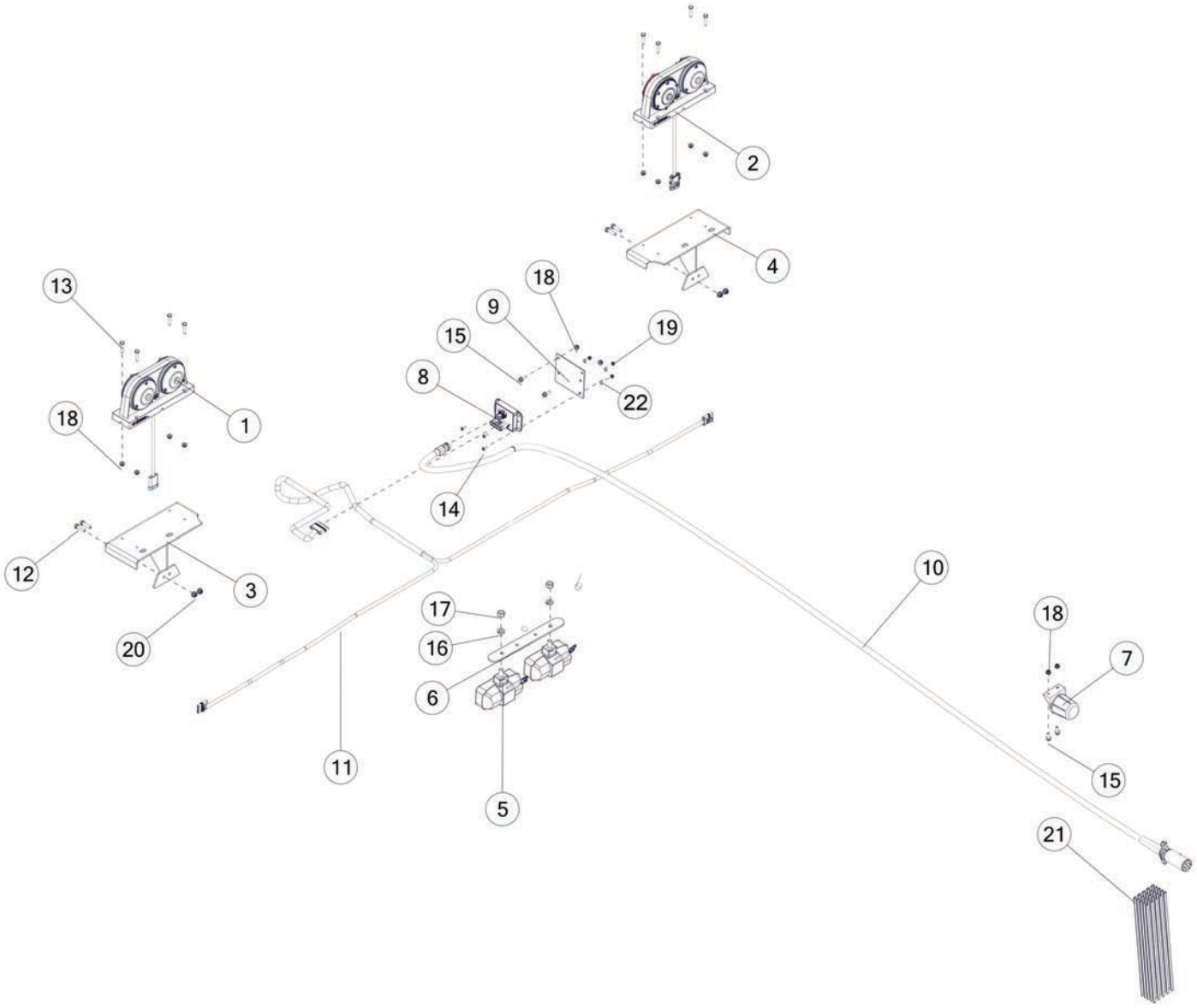

FIGURE 18

REF #	PART #	DESCRIPTION	QTY
1	77924	TAIL LIGHT RH	1
2	77923	TAIL LIGHT LH	1
3	88291	LIGHT MOUNT, RH	1
4	88292	LIGHT MOUNT, LH	1
5	DWM130	FLOODLIGHT - WORKING LIGHT	2
6	91519	WORK LIGHT BRACKET	1
7	CHM38	PLUG STORAGE	1
8	69908	CONTROL BLINKER MODULE	1
9	91528	MODULE BRACKET	1
10	91496	HARNESS, MAIN	1
11	77847	LIGHT HARNESS, BACK	1
12	YBHH10045	BOLT HEX, 5/16 X 1-1/4 G5	4
13	YBHH08030	BOLT HEX, 1/4 X 1-1/4 G2	8
14	YSPN64005	SCREW PAN HEAD, #10-24 X 5/8	3
15	YBFB08075	BOLT FLANGE, 1/4 X 3/4 G5	4
16	YWLO16005	WASHER LOCK , 1/2	2
17	YNHX16005	NUT HEX, 1/2 G2	2
18	YNFG08010	NUT FLANGE , 1/4 GF	12
19	YNNY64005	NUT HEX, NYLON INSERT LOCKNUT, #10	3
20	YNFG10005	NUT FLANGE, 5/16 GF	4
21	CIZT105	ZIPTIE, 15	25
22	YWFL06010	WASHER, FLAT, 3/16 USS	3

PARTS NOTES

H&S

Since 1967

H&S MFG. CO.

products approved

for the

FEMA

SEAL OF QUALITY

Manufactured by:

H&S MANUFACTURING CO., INC.

2608 S. HUME AVE. MARSHFIELD, WI 54449

(715) 387-3414 | hsmfgco.com