H&S PARTS BOOK

HC5114
RAKE

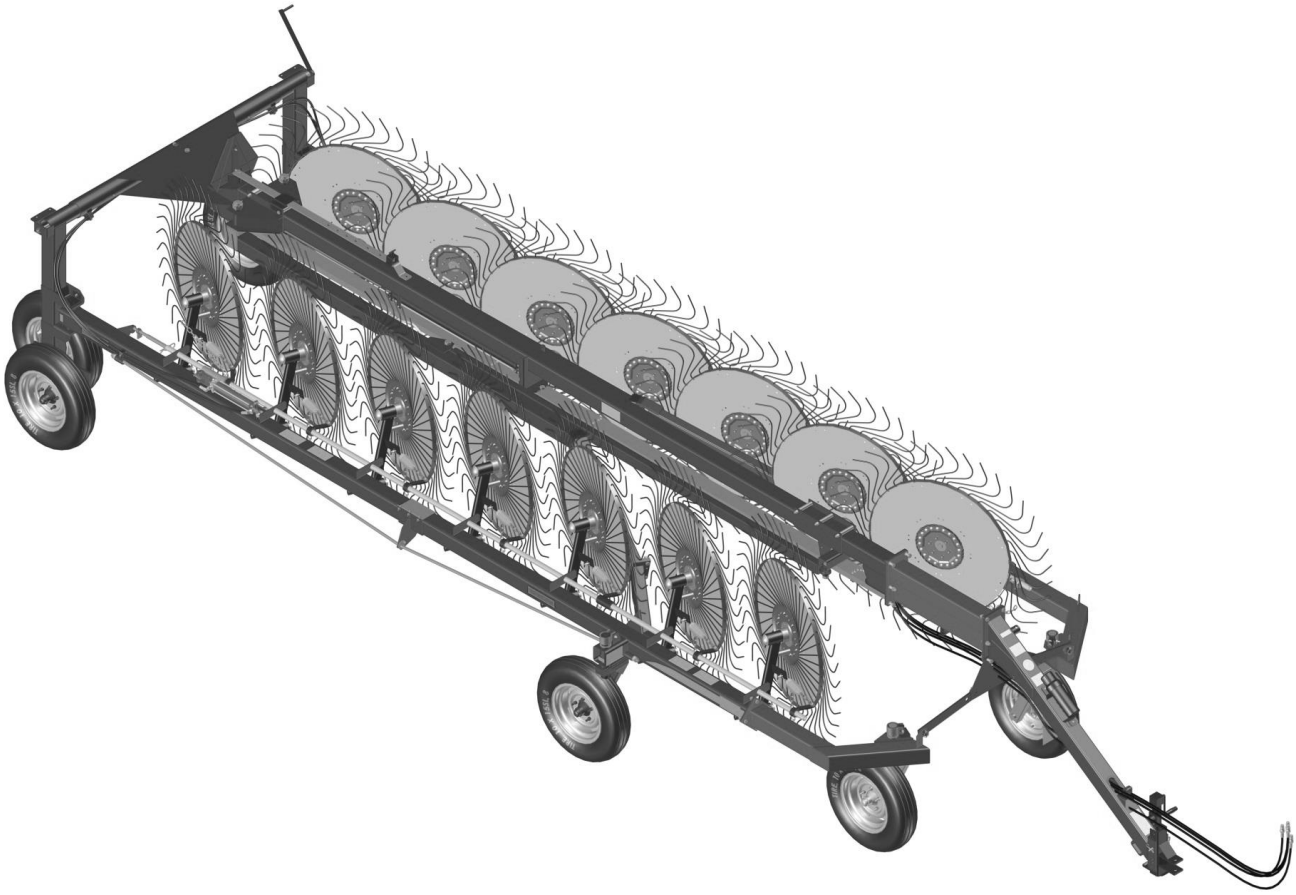

Revision **#02**
Starting Ser. **#712664**

Part **#75694**
HSMFG1216

P.O. BOX 768, MARSHFIELD, WI 54449
(715) 387-3414 FAX (715) 384-5463
www.hsmfgco.com

CONTENTS

Instructions For Ordering Parts – About Improvements 1

Figure 1 - Front Pole Assembly 2-3

Figure 2 – Frame & Components 4-5

Figure 3 – Back Linkage Assembly 6-7

Figure 4 – Rear Pivot & Components 8-9

Figure 5 – Rear Hub Assembly 10-11

Figure 6 – Linkage Assembly 12-13

Figure 7 – RH Rake Beam Assembly 14-15

Figure 8 – LH Rake Beam Assembly 16-17

Figure 9 – Rake Wheel Assembly 18-19

Figure 10 – Hub & Brake Assembly 20-21

Figure 11 – Hydraulics 22-23

Figure 12 – Hydraulic Lift Cylinder 24-25

Figure 13 – Hydraulic Opening Cylinder 26-27

Figure 14 – Optional 2 Wheel Extension 28-29

Figure 15 – Optional 2 Wheel Center Kicker Wheel 30-31

Figure 16 – Optional 3 Wheel Center Kicker Wheel 32-33

Figure 17 – Optional Wind Guar 34-35

Figure 18 – Optional Rake Lights 36-37

Parts Notes - 38

INSTRUCTIONS FOR ORDERING PARTS

All service parts should be ordered through your authorized H&S dealer. They will be able to give you faster service if you will provide them with the following

1. Model & Serial number is located on the left, rear main frame of your unit.
2. All reference to left or right apply to the machine as viewed from the rear.
3. Parts should not be ordered from illustration only. Please order by complete part number.
4. If your dealer has to order parts - give shipping instructions:

   VIA truck - large pieces (please specify local truck lines)

   VIA United Parcel Service (include full address)

H&S MFG. CO. INC.
MARSHFIELD, WIS.

MOD. NO.

SER. NO.

DESCR.

PLEASE RECORD NUMBERS FOR YOUR UNIT FOR QUICK REFERENCE

ABOUT IMPROVEMENTS

H&S IS CONTINUALLY STRIVING TO IMPROVE IT'S PRODUCTS

We must therefore, reserve the right to make improvements or changes whenever it becomes practical to do so without incurring any obligation to make changes or additions to the equipment previously sold.

FIGURE 1
FRONT POLE ASSEMBLY

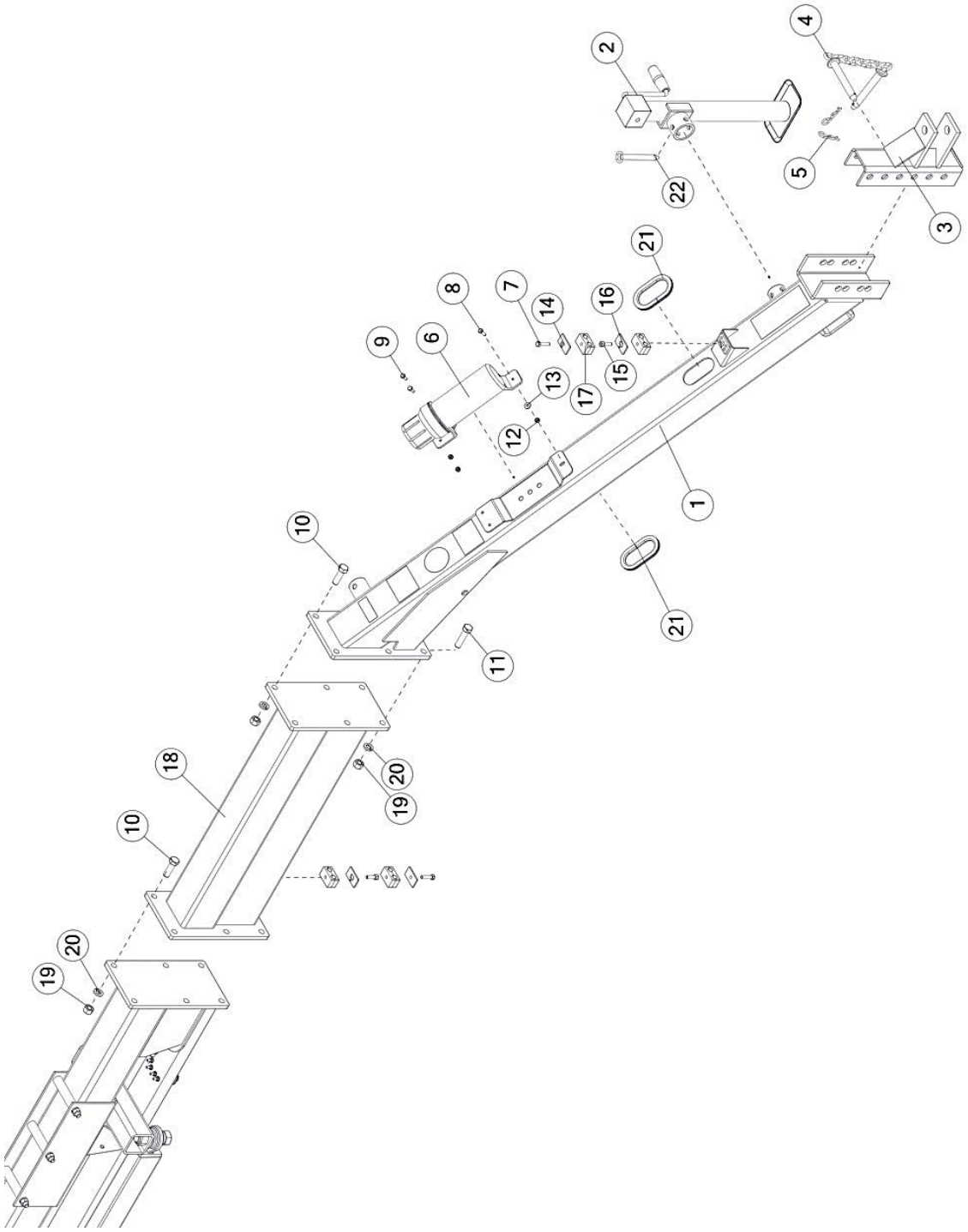

FIGURE 1

FRONT POLE ASSEMBLY

ITEM	QTY	PART #	DESCRIPTION
1	1	67425	ASSM, POLE, FRNT
2	1	BFR753A	JACK, SIDEWIND,2000#
3	1	BFR157	ASSY, HITCH
4	1	BFR450	ASSY, HITCH PIN
5	2	YPHR02010	HAIR PIN, #21-07
6	1	S522	MANUAL HOLDER
7	2	56568	CLAMP BOLT
8	1	YBHH08010	BOLT, 1/4 X 1 GR 5
9	2	YBHH08100	BOLT, 1/4 X 3/4 GR 5
10	10	YBHH20025	BOLT, 5/8 X 2 GR 5
11	2	YBHH20035	BOLT, 5/8"-11 X 2-1/2" GR 5
12	3	YNNY08005	HEX NUT, NYLON LOCKNUT, 1/4-20
13	1	YWFL08005	WASHER, FLAT, 1/4 USS
14	2	56563	CLAMP TOP PLATE
15	2	56573	CLAMP STACKING BOLT
16	2	56581	CLAMP TOP PLATE
17	4	67354	HOSE CLAMP, DOUBLE, 1/4"
18	1	67429	POLE EXTENSION
19	12	YNHX20010	HEX NUT, 5/8-18 GR 8
20	12	YWLO20005	WASHER, LOCK, 5/8
21	1	67442	TRIM, PLASTIC, 0.25X10.3, METAL CORE
22	1	12N117	PIN, 0.56, 5.19, JACK

FIGURE 2
FRAME & COMPONENTS

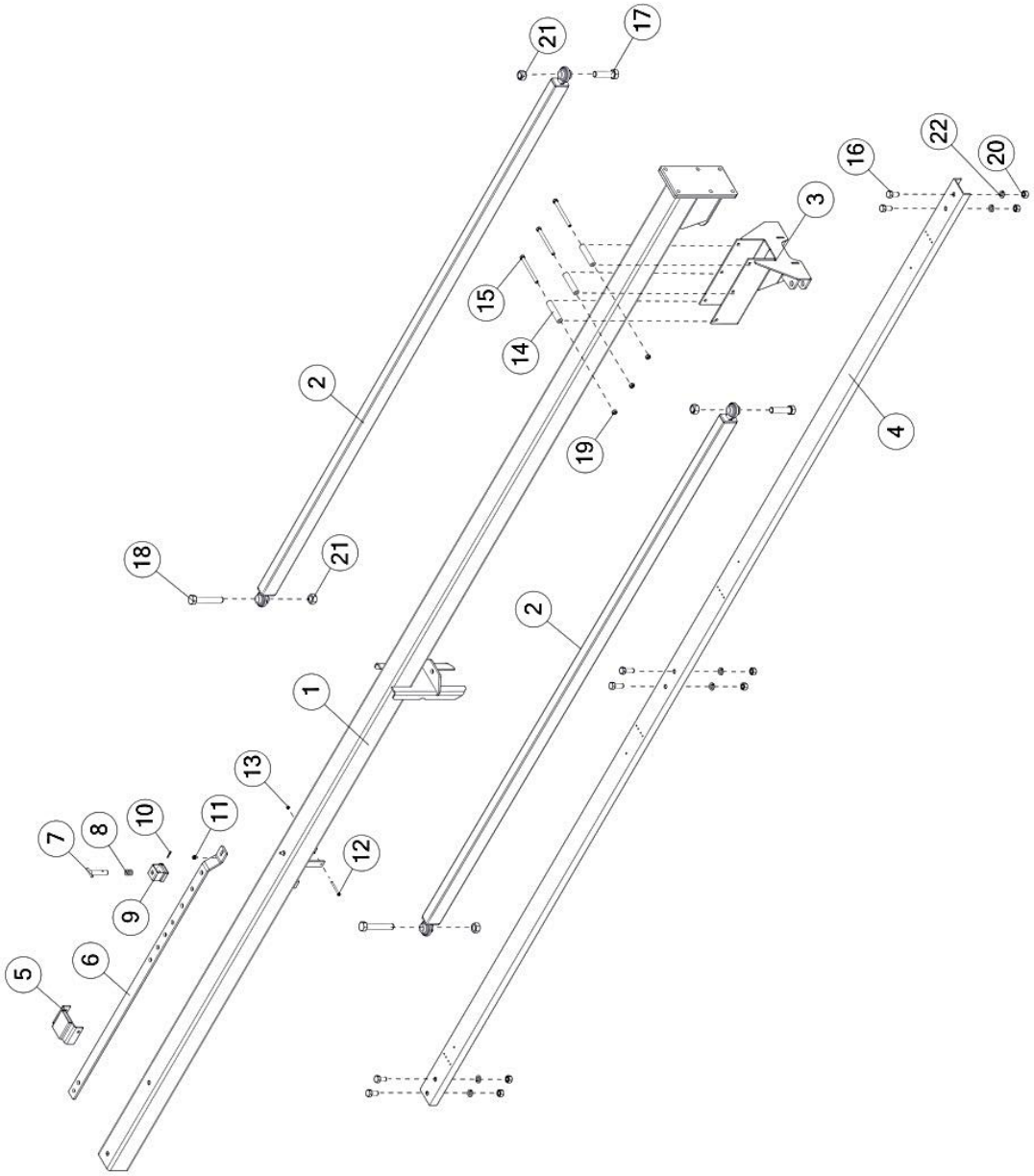

FIGURE 2

FRAME & COMPONENTS

ITEM	QTY	PART #	DESCRIPTION
1	1	67236	ASSM, POLE, CENTER
2	2	BFR458	ASSM, FRONT LINKAGE
3	1	73141	SLIDER WLDMT, FRONT
4	1	70181	CHL, C, 4.00 X 1.58 X 226.31
5	1	67368	WLDMT, STOP, ADJUSTMENT
6	1	67416	BRKT, ADJUSTMENT
7	1	BFR241	ADJUSTMENT HANDLE
8	1	BFR240	SPRING
9	1	BFR239	ASSY, SLEEVE LOCK ADJUSTMENT
10	1	YPCT05005	COTTER PIN, 5/32 X 1
11	1	YBFL10002	SCR, FLG, 0.75-10 X 4.00, G8, PO
12	1	YBHH08114	BOLT, 1/4 X 4 GR 5
13	1	YNTL08005	HEX NUT, TOP LOCK, 1/4-20
14	3	BFR457	TUBE, RND, STR, 1.00 X 0.23 X 4.56
15	3	YBHH16165	BOLT, 1/2 X 6 GR 5
16	6	YBHH24012	3/4-10 X 1-1/2 GRADE 8 BOLT
17	2	YBHH32015	BOLT, 1"-8 X 4 GR 5
18	2	YBHH32025	BOLT, 1"-8 X 6 GR 5
19	3	YNTL16005	HEX NUT, TOP LOCK, 1/2-13
20	6	YNHX24004	HEX NUT, 3/4-10 GR 5
21	4	YNTL32005	HEX NUT, TOP LOCK, 1"-8 GR. C, ZINC
22	6	YWLO24005	WASHER, LOCK, 3/4

FIGURE 3
BACK LINKAGE ASSEMBLY

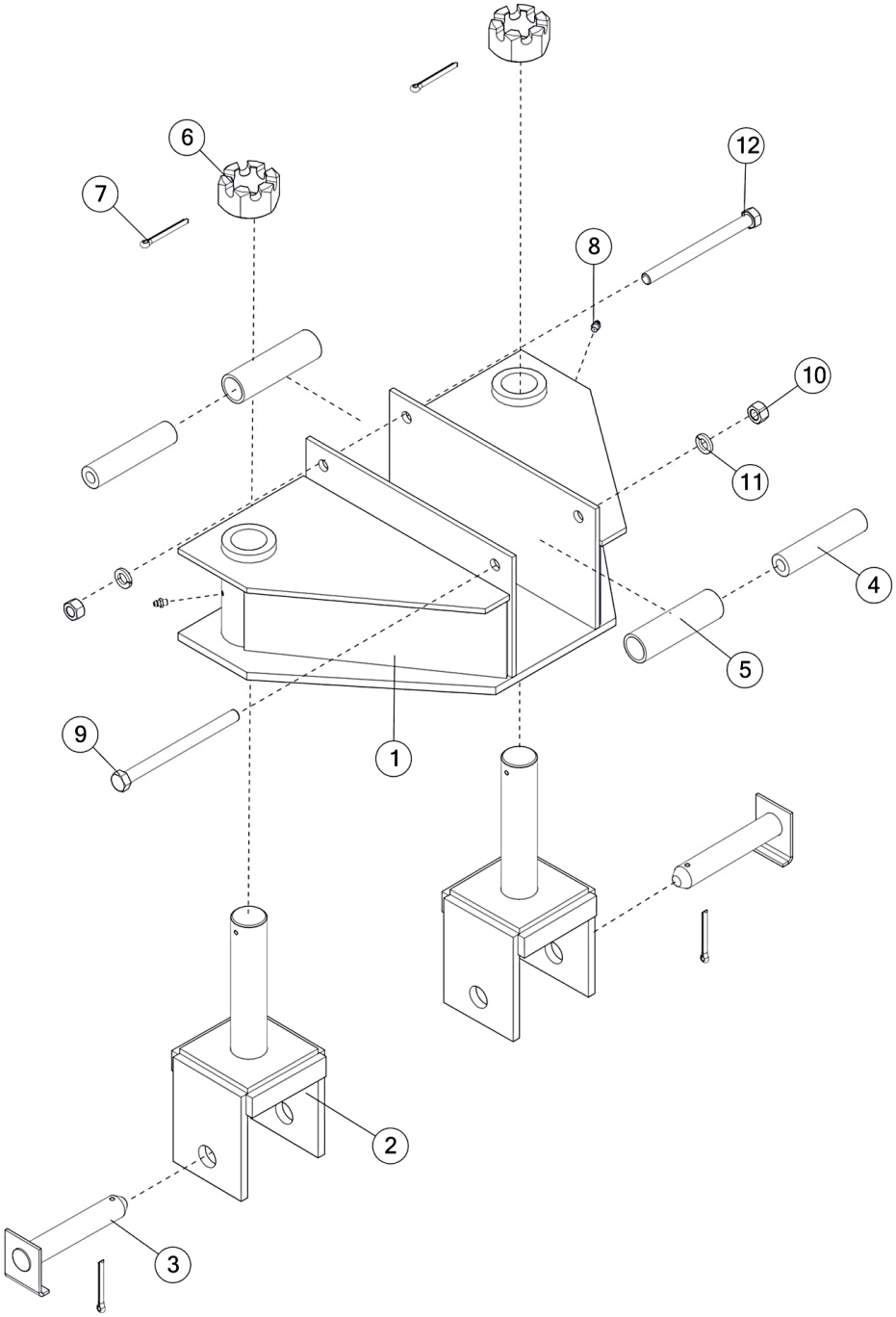

FIGURE 3

BACK LINKAGE ASSEMBLY

ITEM	QTY	PART #	DESCRIPTION
1	1	BFR491	ASSM, BACK LINKAGE SLIDER
2	2	BFR476	ASSM, BACK LINKAGE YOKE, RH
3	2	BFR479	ASSM, PIVOT YOKE SHAFT PIN
4	2	BFR457	TUBE, RND, STR, 1.00 X 0.23 X 4.56
5	2	BFR471	BACK SLIDER ROLLER
6	2	YNSL40005	HEX NUT, SLOTTED, 1-1/2"-12
7	4	YPCT07005	COTTER PIN, 7/32 X 2
8	2	G89	ZERK, 1/4"-28 STRAIGHT
9	1	YBHH16175	BOLT, 1/2 X 6-1/2 GR 5
10	2	YNHX16005	HEX NUT, 1/2
11	2	YWLO16005	WASHER, LOCK, 1/2
12	1	YBHH16165	BOLT, 1/2 X 6 GR 5

FIGURE 4
REAR PIVOT & COMPNENTS

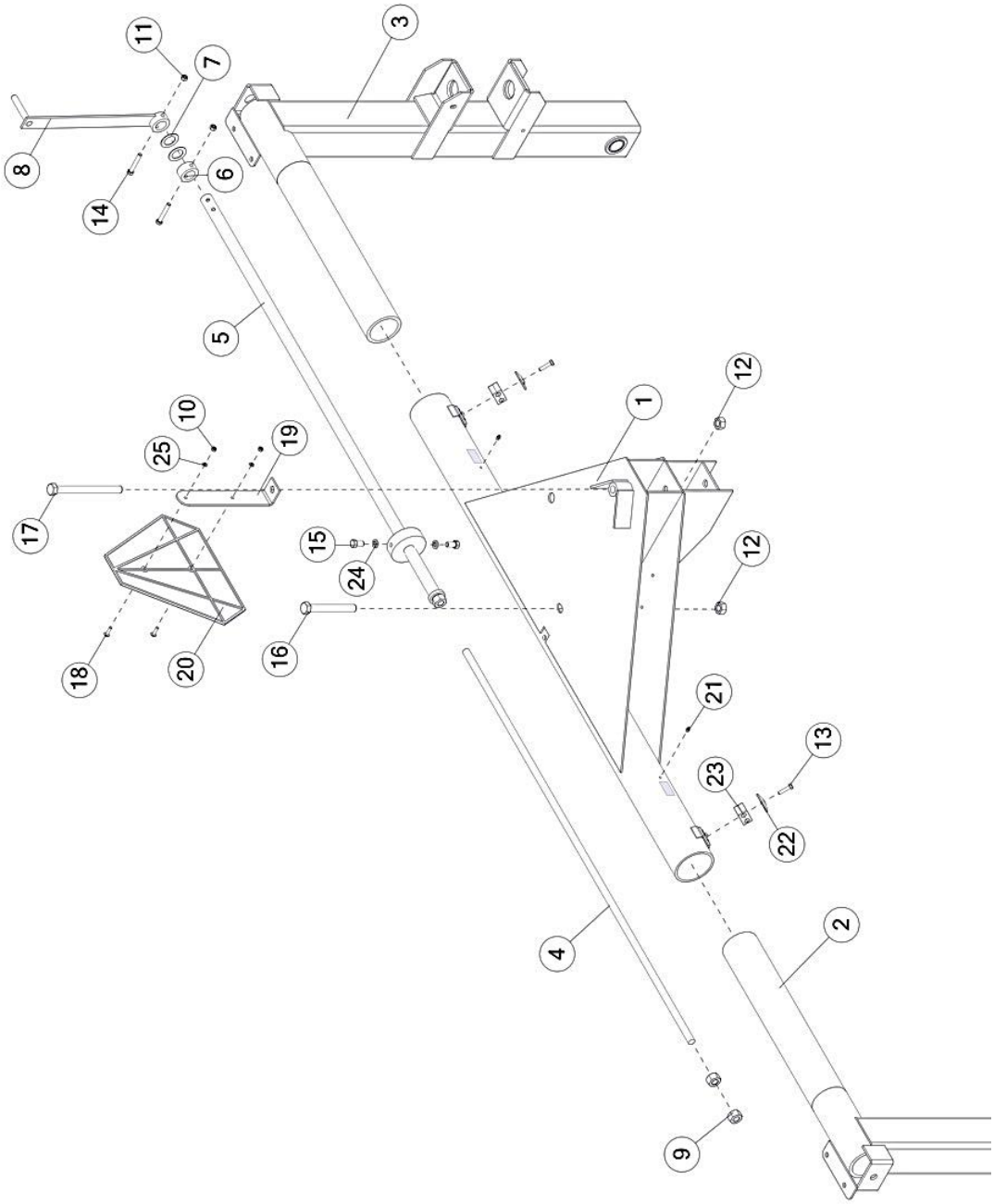

FIGURE 4

REAR PIVOT & COMPONENTS

ITEM	QTY	PART #	DESCRIPTION
1	1	67320	REAR PIVOT
2	1	66841	WLDMT, FRAME, UPRIGHT, RH
3	1	66837	WLDMT, FRAME, UPRIGHT, LH
4	1	66845	REAR WIDTH ADJUSTMENT ROD
5	1	66839	REAR WIDTH ADJUSTMENT TUBE
6	1	BFR422	WIDTH ADJUSTMENT COLLAR
7	2	BFR523	POLY WASHER
8	1	BFR423	ASSM, WIDTH ADJUSTMENT HANDLE
9	2	YNAC24005	HEX NUT, ACME, 3/4-6
10	2	YNHX08005	HEX NUT, 1/4
11	2	YNHX12005	HEX NUT, 3/8-16 GR 2
12	2	YNTL24005	HEX NUT, TOP LOCK, 3/4-10
13	2	56568	CLAMP BOLT
14	2	YBHH12090	BOLT, 3/8 X 2-1/2 GR 5
15	2	YBHH16010	BOLT, 1/2 X 1 GR 5
16	1	YBHH24090	BOLT, 3/4 X 6 GR 5
17	1	YBHH24115	BOLT, 3/4 X 8-1/2 GR 5
18	2	YSTM08005	TRUSS HEAD MACH, SCREW, 1/4-20 X 1 GR.5 ZINC
19	1	BFR649	SMV BRACKET
20	1	BFR723	SMV SIGN
21	2	G89	ZERK, 1/4"-28 STRAIGHT
22	2	56563	CLAMP TOP PLATE
23	2	67354	HOSE CLAMP, DOUBLE, 1/4"
24	2	YWLO16005	WASHER, LOCK, 1/2
25	2	YWLO08005	WASHER, LOCK, 1/4

FIGURE 5
REAR HUB ASSEMBLY

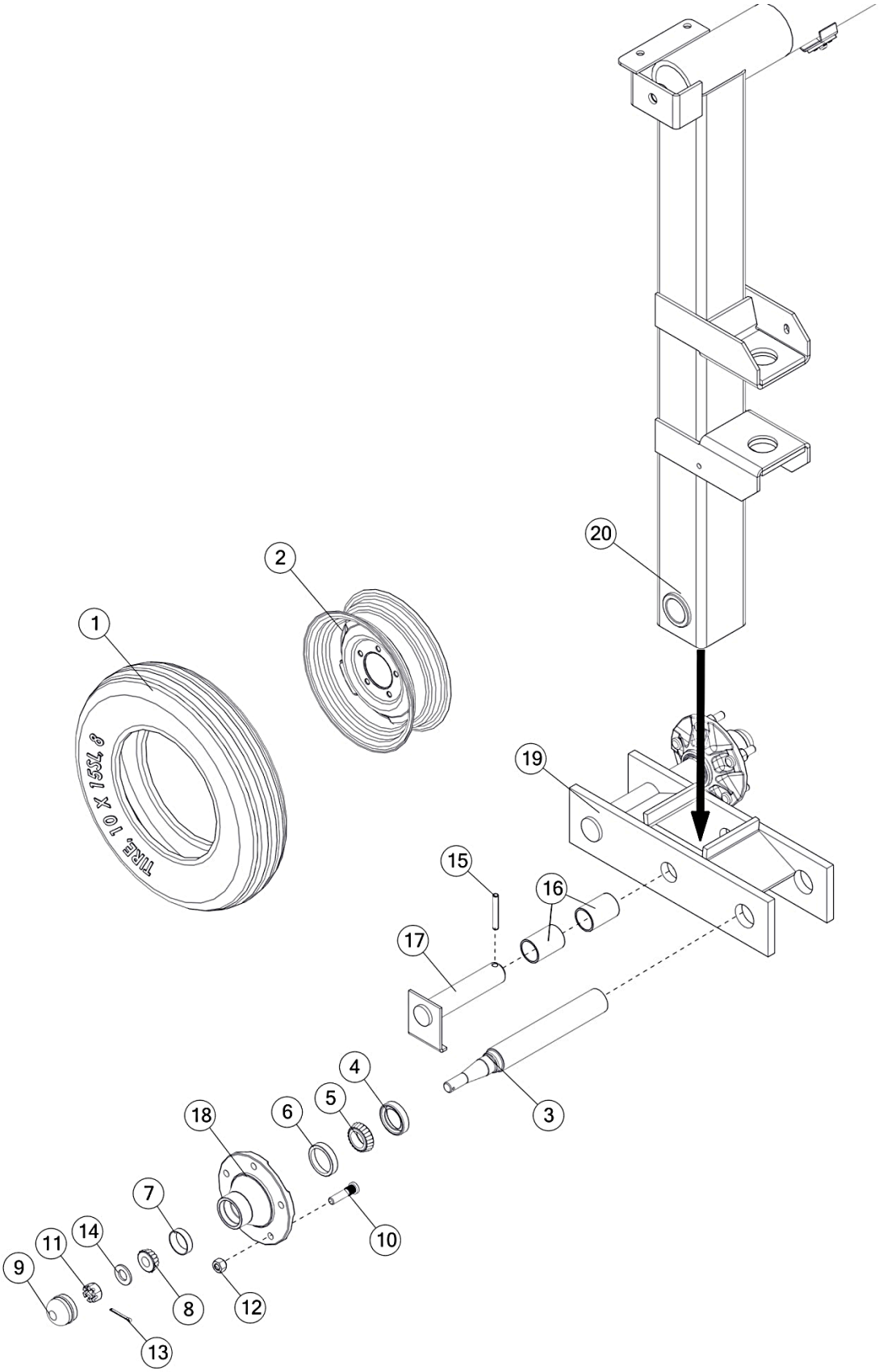

FIGURE 5
REAR HUB ASSEMBLY

ITEM	QTY	PART #	DESCRIPTION
1	4	BFR128	TIRE 670 X 15
2	4	BFR67	WHEEL, 5" X 15"
3	4	BFR522	SPINDLE
4	4	BFR57	SEAL
5	4	BFR58	BEARING
6	4	BFR59	INNER RACE
7	4	BFR61	OUTER RACE
8	4	BFR62	CONE BEARING
9	4	BFR66	HUB CAP
10	20	YBSD16018	STUD BOLT SPECIAL KNURL OD
11	4	YNSL24010	HEX NUT, SLOTTED, 3/4-16, PLAIN
12	20	YNWL16005	WHEEL NUT, 1/2"-20 UNF
13	4	YPCT05010	COTTER PIN 5/32" X 1-1/2"
14	4	YWFL24010	WASHER, FLAT, SAE 3/4, PLAIN
15	4	YPEX12025	EXPANSION PIN, 3/8" X 2-3/4"
16	4	56244	BUSHING, BRONZE,
17	4	BFR524	ASSM, TANDEM PIN
18	4	BFR60	HUB, WITH RACES AND STUDS
19	1	BFR509	ASSY, RH TANDEM AXLE
*	1	BFR510	ASSY, LH TANDEM AXLE
20	1	66841	WLDMT, FRAME, UPRIGHT, RH
*	1	66837	WLDMT, FRAME, UPRIGHT, LH

*** MEANS NOT SHOWN**

FIGURE 6
LINKAGE ASSEMBLY

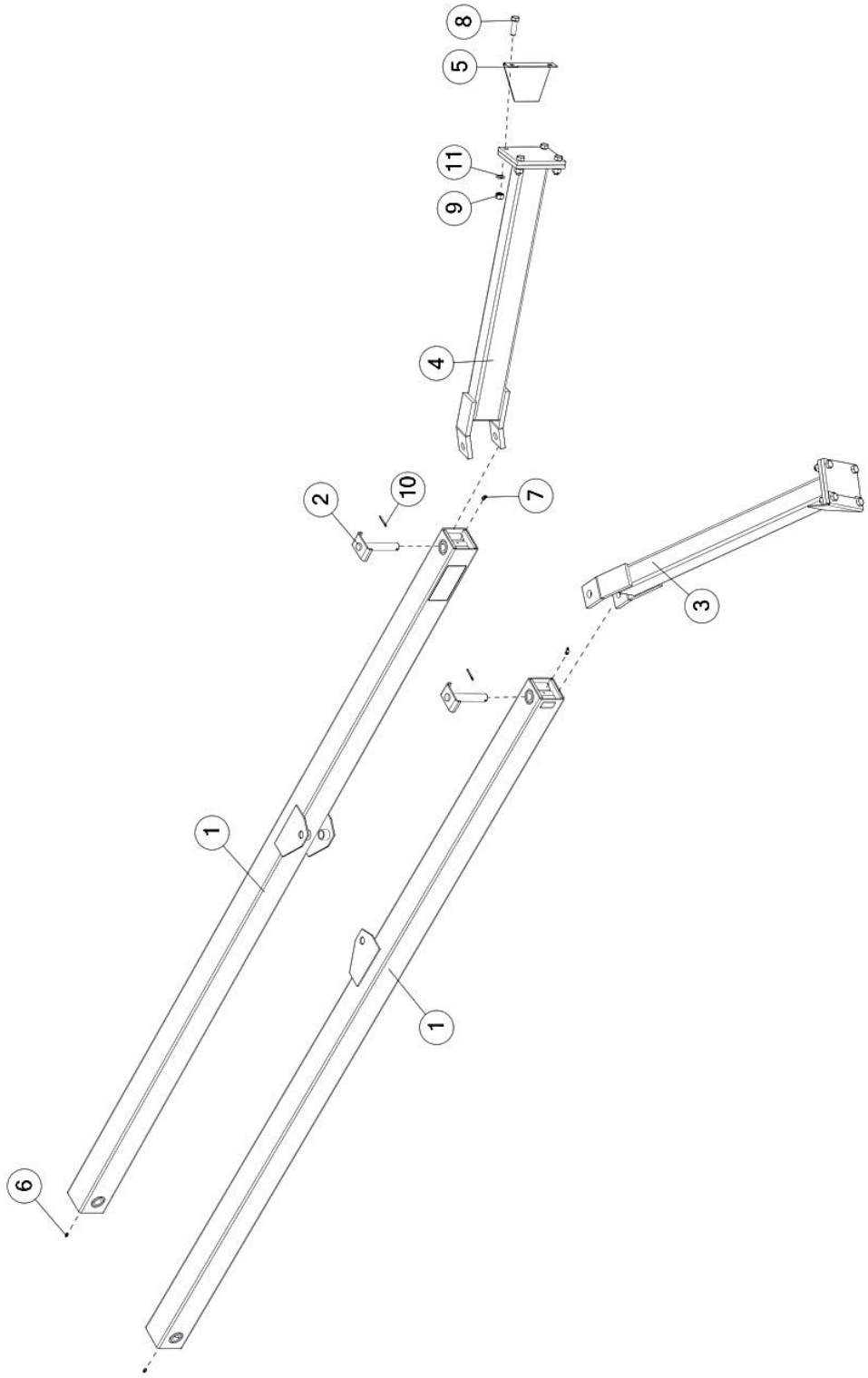

FIGURE 6
LINKAGE ASSEMBLY

ITEM	QTY	PART #	DESCRIPTION
1	2	BFR462	ASSM, RIGHT REAR LINKAGE
2	2	BFR461	ASSM, RAKE BEAM ARM PIN
3	1	BFR744	ASSM, RAKE BEAM ARM, RH
4	1	BFR745	ASSM, RAKE BEAM ARM, LH
5	2	BFR549	TOOTH DEFLECTOR
6	2	G89	ZERK, 1/4"-28 STRAIGHT
7	2	RG21	GREASE ZERK, 45 DEGREE
8	8	YBHH20025	BOLT, 5/8 X 2 GR 5
9	8	YNHX20010	HEX NUT, 5/8-18 GR 8
10	2	YPCT05010	COTTER PIN 5/32" X 1-1/2"
11	8	YWLO20005	WASHER, LOCK, 5/8

FIGURE 7
RH RAKE BEAM ASSEMBLY

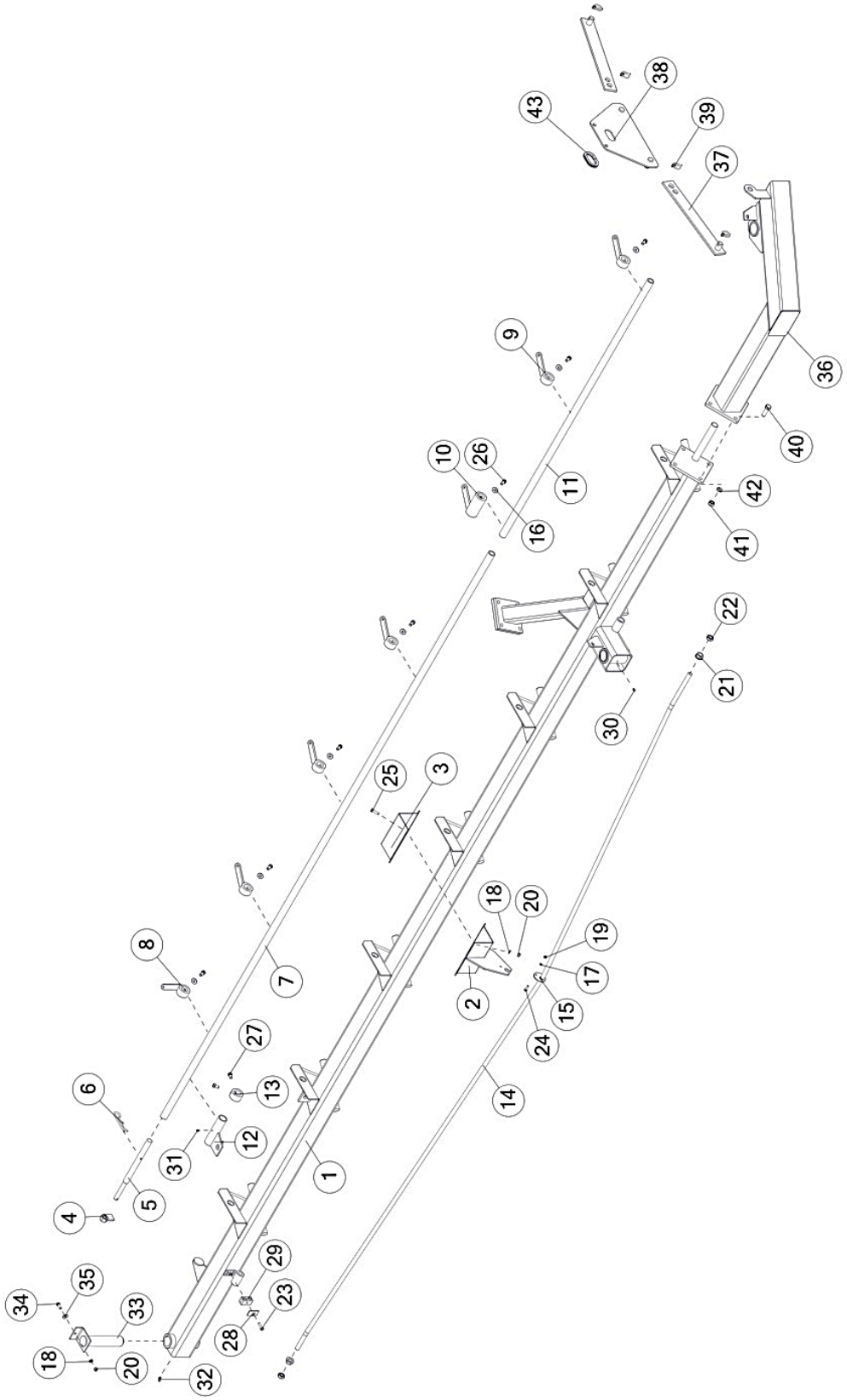

FIGURE 7
RH RAKE BEAM ASSEMBLY

ITEM	QTY	PART #	DESCRIPTION
1	1	67336	ASSM, BEAM WITH DECALS, RH
2	1	14DWE85	ROD STANDOFF
3	1	14D3G18	ROD STAND-OFF BRACKET
4	1	BFR426	ASSM, RAKE PRESSURE HANDLE
5	5	BFR486	ASSM, RAKE ARM LOCK-UP SHAFT
6	1	YPHR08040	HAIR PIN, 1/4" X 5" 2109
7	1	BFR521	LIFTING PIPE BACK
8	1	BFR431	ASSM, SPRING BRACKET, LH
9	4	BFR430	ASSM, SPRING BRACKET, RH
10	1	BFR749	ASSM, LONG LIFT PIPE CONNECTOR, RH
11	1	BFR520	FRONT LIFT PIPE
12	1	BFR531	ASSM, HYDRAULIC CYLINDER END SLIDE, RH
13	1	BFR83	PIPE CLAMP
14	1	BFR612	SIDE ARM STABILIZER ROD
15	1	DF22	RING FOR STRAP
16	7	YWFL14005	WASHER, FLAT, 7/16 USS
17	2	YWLO08005	WASHER, LOCK, 1/4
18	8	YWLO12005	WASHER, LOCK, 3/8
19	1	YNHX08005	HEX NUT, 1/4
20	8	YNHX12005	HEX NUT, 3/8-16 GR 2
21	2	BFR618	FLANGE NUT, NF, 3/4"-16
22	2	YNJM24011	HEX NUT, JAM, 3/4-16
23	1	56568	CLAMP BOLT
24	1	YBHH08010	BOLT, 1/4 X 1 GR 5
25	6	YBHH12040	BOLT, 3/8 X 1-1/4 GR 5 FULL THREAD
26	7	YBHH14005	BOLT, 7/16 X 1 GR 5
27	2	YBHH14035	BOLT, 7/16 X 3/4 GR 5
28	1	56563	CLAMP TOP PLATE
29	1	67354	HOSE CLAMP, DOUBLE, 1/4"
30	1	G89	ZERK, 1/4"-28 STRAIGHT
31	1	MS26	1/4" - 28, STRAIGHT STANDARD SHORTGREASE FITTING
32	1	RG21	GREASE ZERK, 45 DEGREE
33	1	BFR756	BEAM PIVOT SHAFT
34	2	YBHH12010	BOLT, 3/8 X 1 GR 5
35	1	YWFL12005	WASHER, FLAT, 3/8 USS
36	1	BFR726	ASSY, RIGHT EXTENSION
37	2	BFR597	SAFETY BAR
38	1	67432	TRANSPORT MOUNT
39	4	YPLY08011	LYNCH PIN, 1/4 X 1-9/16
40	4	YBHH20025	BOLT, 5/8-11 X 2 GR 5
41	4	YNHX20010	HEX NUT, 5/8-18 GR 8
42	4	YWLO20005	WASHER, LOCK, 5/8
*	1	63796	RAKE ARM STOP
43	1	67448	TRIM, PLASTIC, 0.25X7.68, METAL CORE

*** MEANS NOT SHOWN**

FIGURE 8
LH RAKE BEAM ASSEMBLY

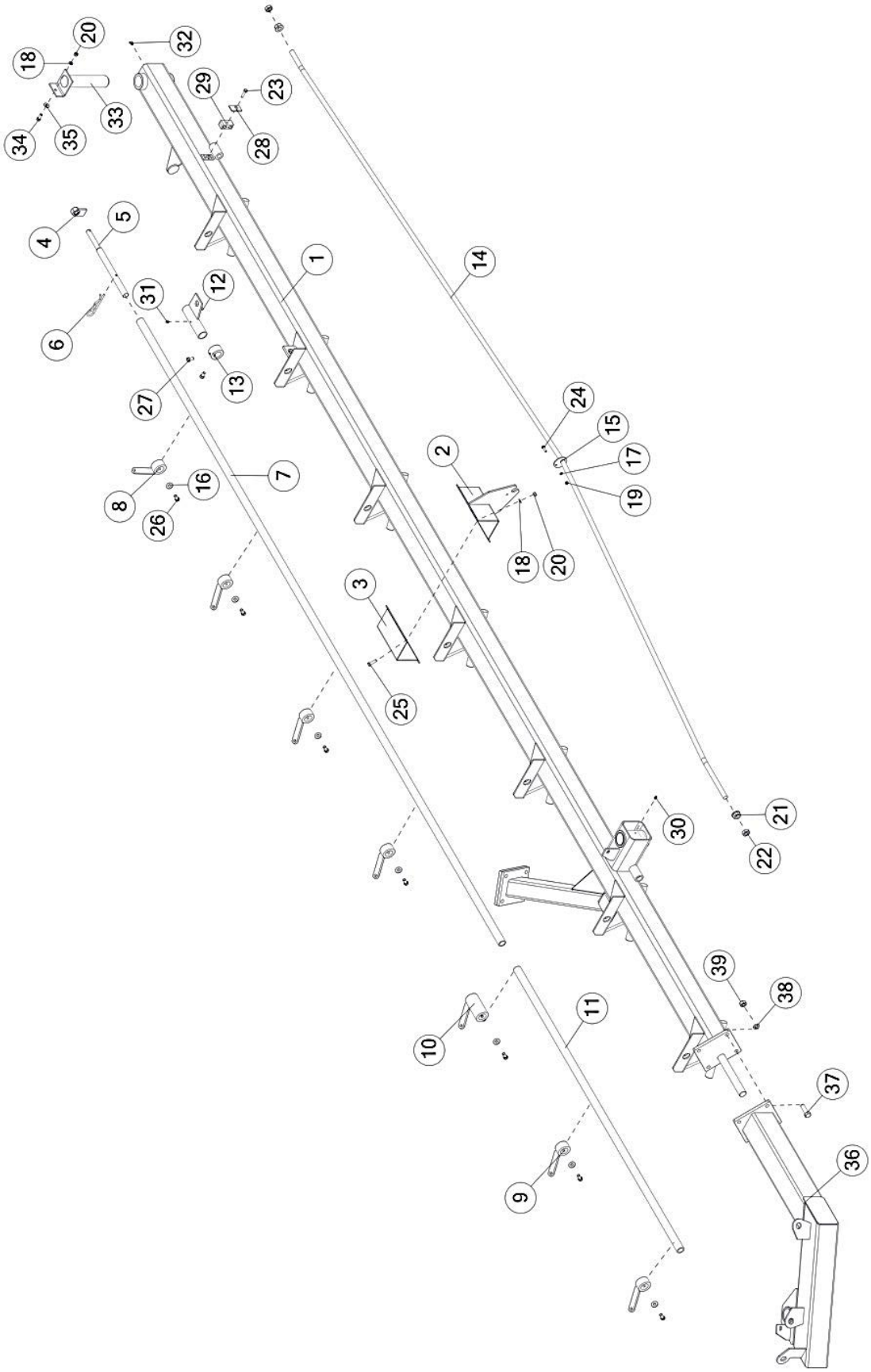

FIGURE 8
LH RAKE BEAM ASSEMBLY

ITEM	QTY	PART #	DESCRIPTION
1	1	67322	ASSM, BEAM WITH DECALS, LH
2	1	14DWE85	ROD STANDOFF
3	1	14D3G18	ROD STAND-OFF BRACKET
4	1	BFR426	ASSM, RAKE PRESSURE HANDLE
5	1	BFR486	ASSM, RAKE ARM LOCK-UP SHAFT
6	1	YPHR08040	HAIR PIN, 1/4" X 5" 2109
7	1	BFR521	LIFTING PIPE BACK
8	1	BFR430	ASSM, SPRING BRACKET, RH
9	4	BFR431	ASSM, SPRING BRACKET, LH
10	1	BFR750	ASSM, LONG LIFT PIPE CONNECTOR, LH
11	1	BFR520	FRONT LIFT PIPE
12	1	BFR530	ASSM, HYDRAULIC CYLINDER END SLIDE, LH
13	1	BFR83	PIPE CLAMP
14	1	BFR612	SIDE ARM STABILIZER ROD
15	1	DF22	RING FOR STRAP
16	7	YWFL14005	WASHER, FLAT, 7/16 USS
17	3	YWLO08005	WASHER, LOCK, 1/4
18	8	YWLO12005	WASHER, LOCK, 3/8
19	1	YNHX08005	HEX NUT, 1/4
20	8	YNHX12005	HEX NUT, 3/8-16 GR 2
21	2	BFR618	FLANGE NUT, NF, 3/4"-16
22	2	YNJM24011	HEX NUT, JAM, 3/4-16
23	1	56568	CLAMP BOLT
24	1	YBHH08010	BOLT, 1/4 X 1 GR 5
25	6	YBHH12035	BOLT, 3/8"-16 X 1-1/4" GR. 5
26	7	YBHH14005	BOLT, 7/16 X 1 GR 5
27	2	YBHH14035	BOLT, 7/16 X 3/4 GR 5
28	1	56563	CLAMP TOP PLATE
29	1	67354	HOSE CLAMP, DOUBLE, 1/4"
30	1	G89	ZERK, 1/4"-28 STRAIGHT
31	1	MS26	1/4" - 28, STRAIGHT STANDARD SHORT GREASE FITTING
32	1	RG21	GREASE ZERK, 45 DEGREE
33	1	BFR756	BEAM PIVOT SHAFT
34	2	YBHH12010	BOLT, 3/8 X 1 GR 5
35	1	YWFL12005	WASHER, FLAT, 3/8 USS
36	1	BFR727	ASSY, LEFT EXTENSION
37	4	YBHH20025	BOLT, 5/8 X 2 GR 5
38	4	YWLO20005	WASHER, LOCK, 5/8
39	4	YNHX20010	HEX NUT, 5/8-18 GR 8
*	1	63796	RAKE ARM STOP

*** MEANS NOT SHOWN**

FIGURE 9
RAKE WHEEL ASSEMBLY

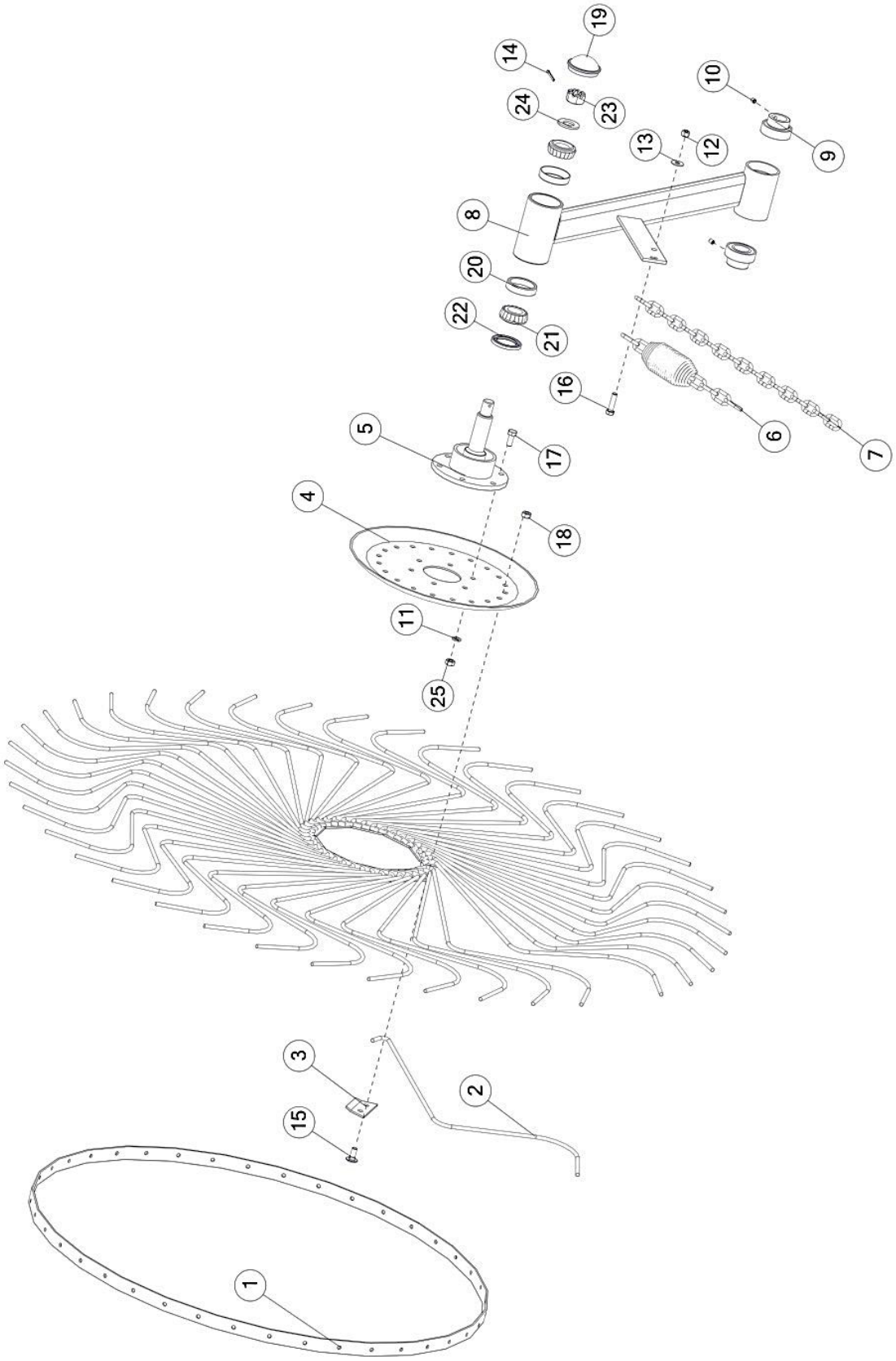

FIGURE 9
RAKE WHEEL ASSEMBLY

ITEM	QTY	PART #	DESCRIPTION
1	1	FR72	RAKE WHEEL OUTER RING
2	40	FR73	RAKE WHEEL TOOTH, 60", BLACK
3	10	FR74	RAKE TOOTH CLIP
4	1	FR71	RAKE WHEEL CENTER
5	1	FR24	RAKE WHEEL HUB
6	1	8771	RAKE WHEEL SPRING
7	1	BFR111	KICKER WHEEL ADJ. CHAIN
8	1	14DWE93	HI CAP HEAVY ARM LH
*	1	14DWE94	HI CAP HEAVY ARM RH
9	2	BFR525	FLAT BEARING 1-1/4", W/ LOCK COLLAR ASSEMBLY
10	2	YSKP10020	SET SCREW, SOCKET
11	6	YWLO12005	WASHER, LOCK, 3/8
12	1	YNTL12005	HEX NUT, TOP LOCK, 3/8-16
13	1	YWFL12005	WASHER, FLAT, 3/8 USS
14	1	YPCT05010	COTTER PIN 5/32" X 1-1/2"
15	20	YBCR76005	CARR. BOLT, 10MM X 25MM
16	1	YBHH12025	BOLT, 3/8-16 X 1-1/2 GR 5
17	6	YBHH12035	BOLT, 3/8 X 1-1/4 GR 5
18	20	YNHX76015	HEX NUT, M10-1.5
19	1	57875	HUB CAP - ZINC PLATED
20	2	58714	RACE
21	2	HD122	BEARING
22	1	HD124	SEAL
23	1	YNSL28005	HEX NUT, SLOTTED, 7/8-14
24	1	YWFL28010	WASHER, FLAT, SAE 7/8
25	6	YNHX12005	HEX NUT, 3/8 - 16 GR 5

*** MEANS NOT SHOWN**

FIGURE 10
HUB & BRAKE ASSEMBLY

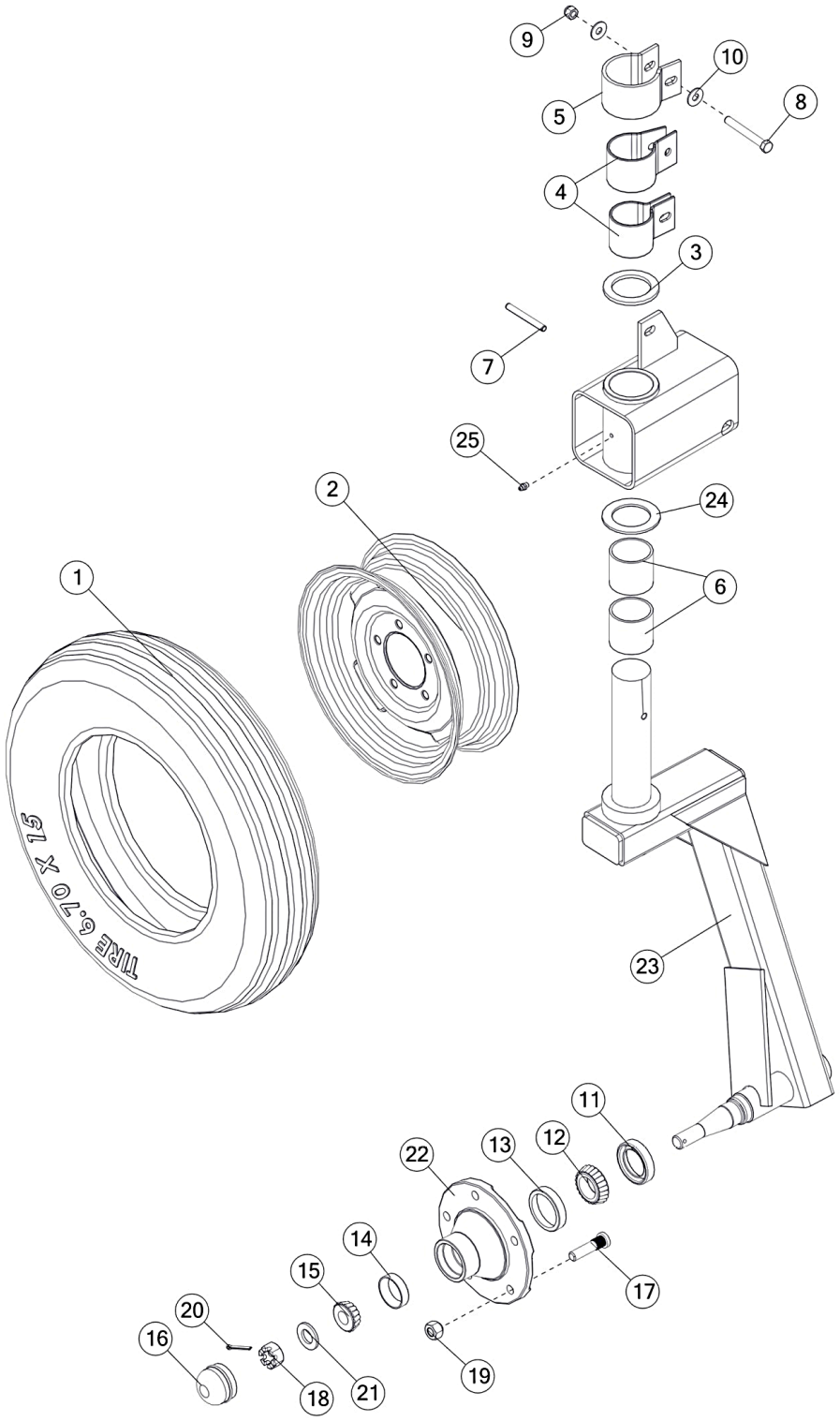

FIGURE 10
HUB & BRAKE ASSEMBLY

ITEM	QTY	PART #	DESCRIPTION
1	2	BFR128	TIRE 670 X 15
2	2	BFR67	WHEEL, 5" X 15"
3	2	BFR309	GAUGE WHEEL WASHER
4	4	BFR310	BRAKE PAD
5	2	BFR311	BRAKE COLLAR
6	4	BFR527	BUSHING, BRONZE, GAUGE WHEEL, 2.00" ID X 2-1/4" OD X 2.00" LONG
7	2	YPEX10025	EXPANSION PIN, 5/16" X 2-3/4"
8	2	YBHH12125	BOLT, 3/8 X 3 GR 5 FULL THREAD
9	2	YNNY12005	HEX NUT, NYLON LOCKNUT, 3/8
10	4	YWFL12005	WASHER, FLAT, 3/8 USS
11	2	BFR57	SEAL
12	2	BFR58	BEARING, INNER
13	2	BFR59	RACE
14	2	BFR61	OUTER RACE
15	2	BFR62	CONE BEARING
16	2	BFR66	HUB CAP
17	10	YBSD16018	STUD BOLT SPECIAL KNURL OD
18	2	YNSL24010	HEX NUT, SLOTTED, 3/4-16, PLAIN
19	10	YNWL16005	WHEEL NUT, 1/2"-20 UNF
20	2	YPCT05010	COTTER PIN 5/32" X 1-1/2"
21	2	YWFL24010	WASHER, FLAT, SAE 3/4, PLAIN
22	2	BFR60	HUB, WITH RACES AND STUDS
23	1	BFR316	GAUGE WHEEL ASSEMBLY, LH
*	1	BFR312	GAUGE WHEEL ASSEMBLY, RH
24	2	RG24	WASHER, THRUST, BRONZE, 2.00" ID X 3.00 OD X .125" LONG
25	2	G89	ZERK, 1/4"-28 STRAIGHT

*** MEANS NOT SHOWN**

FIGURE 11
HYDRAULICS

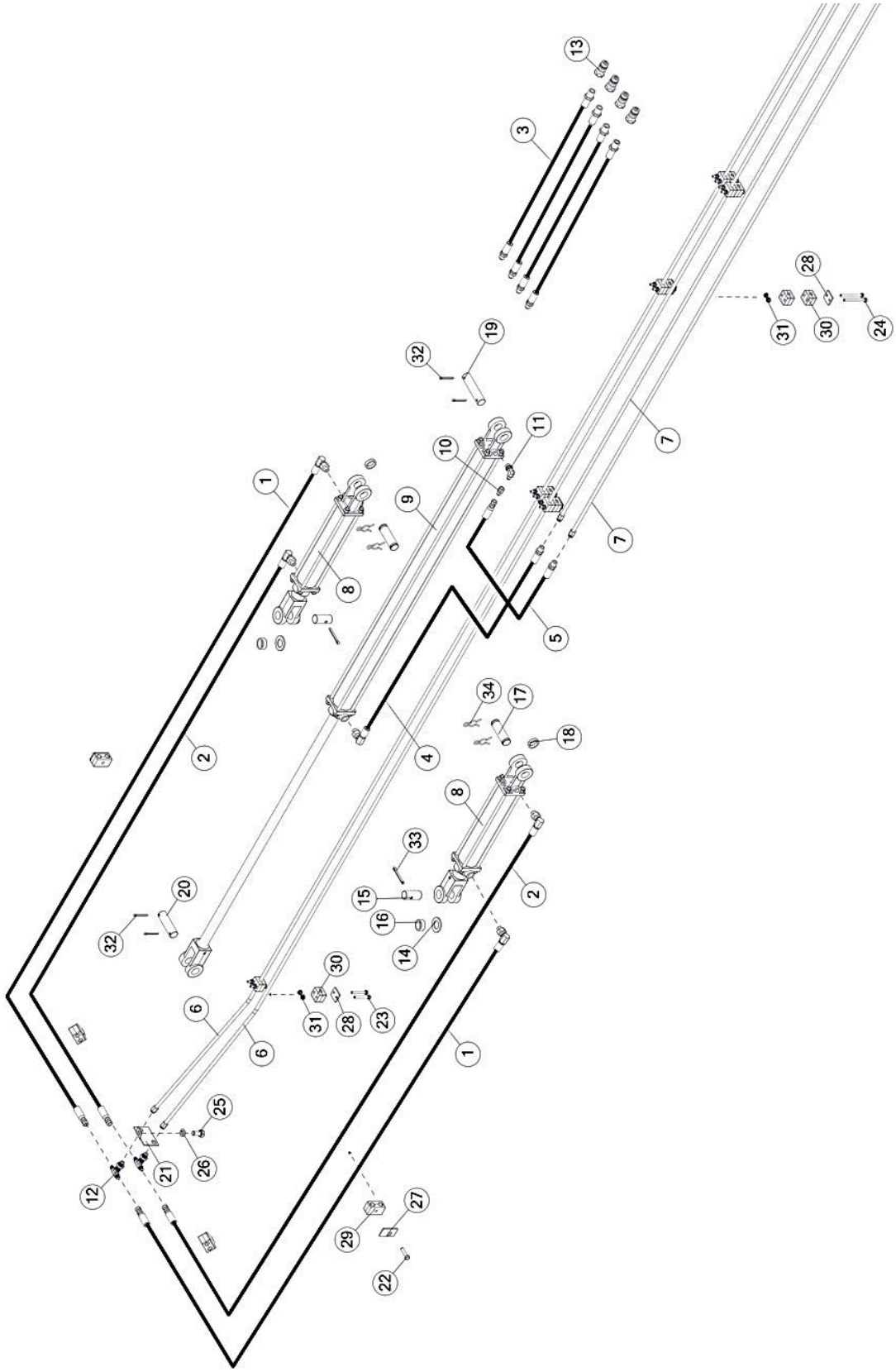

FIGURE 11
HYDRAULICS

ITEM	QTY	PART #	DESCRIPTION
1	2	67077	HSASSM, HYD, 4 X 108, 6ORB, 4JIC
2	2	67420	HSASSM, HYD, 4 X 120, 6ORB, 4JIC
3	4	71764	HSASSM, HYD, 4 X 168, 4JIC, 8ORB
4	1	70706	HSASSM, HYD, 4 X 33, 4JIC, 6ORB
5	1	70710	HSASSM, HYD, 4 X 30, 4JIC, 4JIC SWIVEL
6	2	71333	TUBE, RND, HYD, 0.375" X 0.049" X 0.277" X 237.85"
7	2	70613	TUBE, RND, HYD, 0.25 X .13 X130
8	2	66933	2.0" X 10" HYDRAULIC CYLINDER
9	1	66935	2.0" X 40" HYDRAULIC CYLINDER
10	1	58108	IN-LINE CONNECTOR, ORIFICE, 4-XHX7-S .031
11	1	71281	MALE 37° / ORB
12	2	71585	BULKHEAD TEE FITTING, 04X04X06
13	4	67148	FTG, ST, 8ORB, QUICK COUPLER TIP
14	2	16SV136	WASH, FLAT, 1.75 X 1.02 X 0.13, ZC
15	2	BFR517	CYLINDER PIN BACK
16	2	K106	SPACER
17	2	T143	HYDRAULIC CYLINDER PIN
18	2	X94	1ST BEATER SPACER
19	1	BFR396	CYLINDER PIN
20	1	BFR634	CYLINDER PIN
21	1	66939	BRKT, MOUNT, HYD BULKHEAD T
22	4	56568	CLAMP BOLT
23	4	YBHH08045	BOLT, 1/4 X 2 GR 5
24	12	YBHH08085	BOLT, 1/4 X 3 GR 5
25	1	YBHH16010	BOLT, 1/2 X 1 GR 5
26	1	YWLO16005	WASHER, LOCK, 1/2
27	4	56563	CLAMP TOP PLATE
28	8	CHM273	CLAMP TOP PLATE
29	4	67354	HOSE CLAMP, DOUBLE, 1/4"
30	8	CHM280	HOSE CLAMP
31	14	YNFG08010	HEX NUT, FLANGE, NYLOCK, 1/4-20, GR F, ZINC
32	4	YPCT05010	COTTER PIN 5/32" X 1-1/2"
33	2	YPCT08007	COTTER PIN, 1/4 X 2
34	4	YPHR02020	HAIR PIN, #23-10

FIGURE 12
HYDRAULIC LIFT CYLINDER

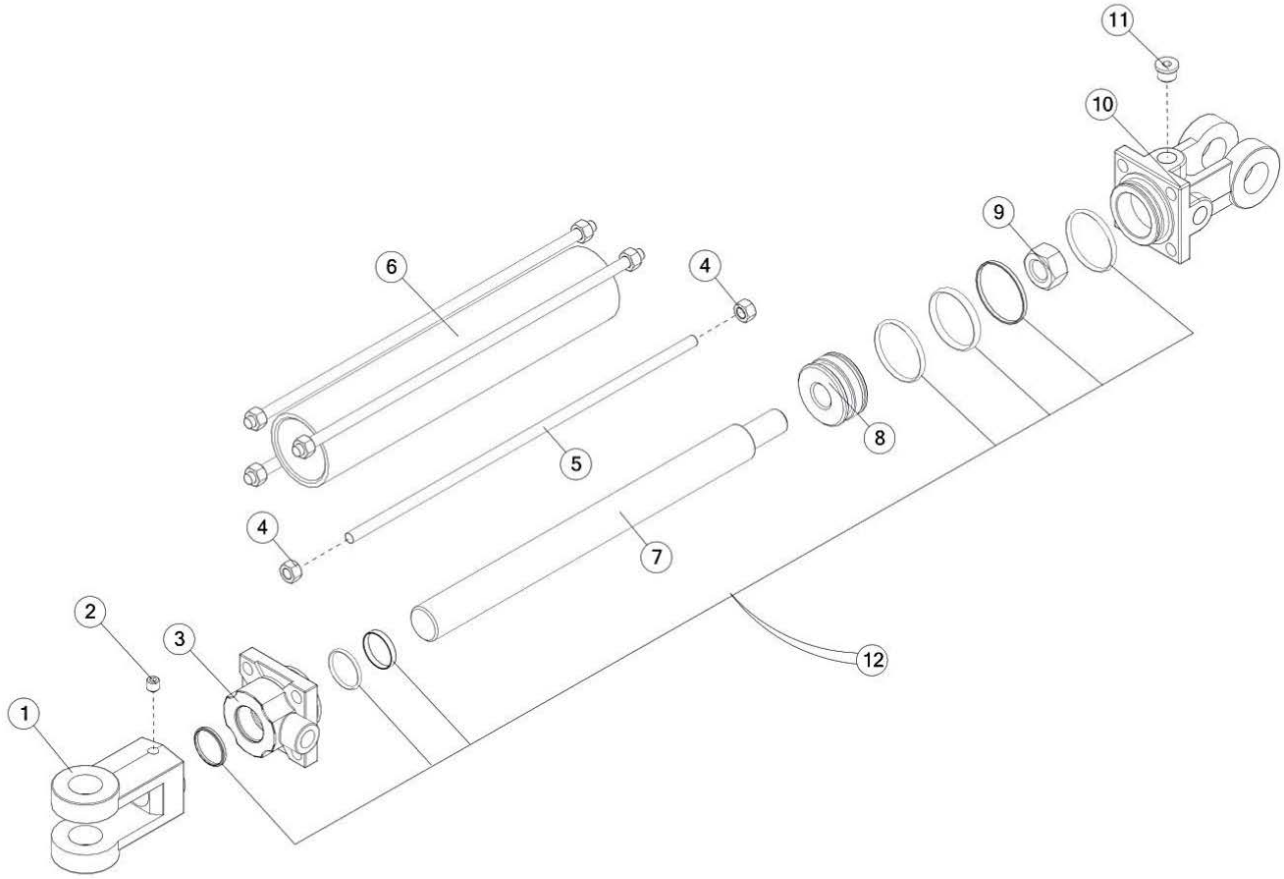

FIGURE 12
HYDRAULIC LIFT CYLINDER

ITEM	QTY	PART #	DESCRIPTION
1	1	23N150A	ROD CLEVIS
2	1	YSSO12015	SET SCREW, SOCKET, 3/8-24 X 3/8 ROD CAP
3	1	66934	FOR 2" CYLINDERS
4	8	YNHX12006	HEX NUT, 3/8-24
5	4	16SV170	TIE ROD
6	1	16SV169	CYLINDER TUBE
7	1	16SV168A	CYLINDER ROD FOR 2" X 10" CYLINDER
8	1	56180	PISTON FOR 2" CYLINDER
9	1	23N148	PISTON NUT
10	1	66932	CLEVIS CAP FOR 2" CYLINDER HOLLOW HEX
11	1	SD270	PLUG 6
12	1	56187	SEAL KIT FOR 2" CYLINDER
*	1	66933	2.0" X 10" HYDRAULIC CYLINDER (3000 PSI)

FIGURE 13
HYDRAULIC OPENING CYLINDER

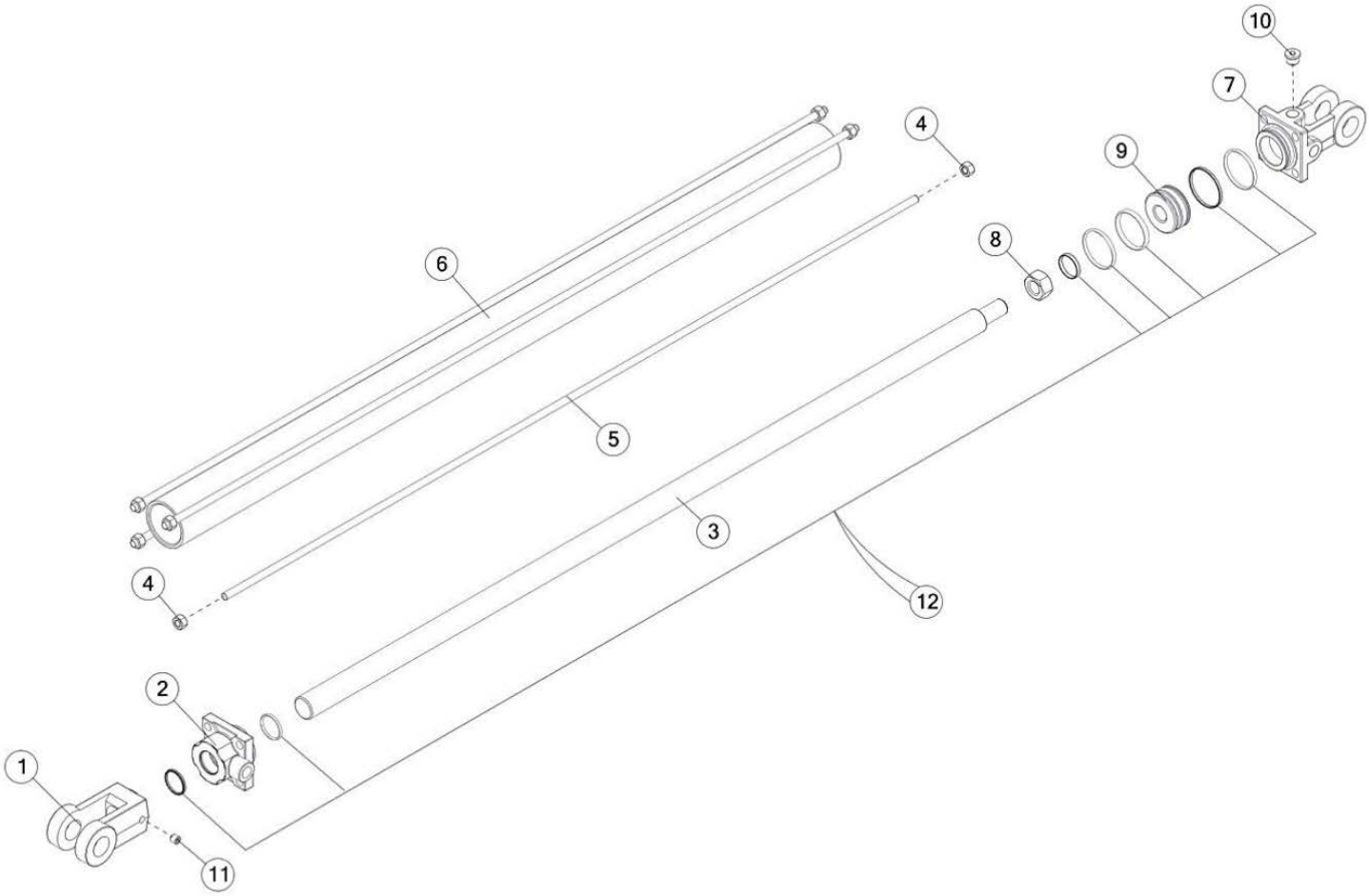

FIGURE 13
HYDRAULIC OPENING CYLINDER

ITEM	QTY	PART #	DESCRIPTION
1	1	23N150A	ROD CLEVIS
2	1	56174	ROD CAP FOR 2" CYLINDERS
3	1	BFR654	ROD
4	8	YNHX10005	HEX NUT, 5/16 GR 2
5	4	BFR656	TIE ROD
6	1	BFR655	CYLINDER TUBE
7	1	23N142A	CLEVIS CAP FOR 2" CYLINDER
8	1	23N148	PISTON NUT
9	1	56180	PISTON FOR 2" CYLINDER
10	1	SD270	HOLLOW HEX PLUG 6
11	1	YSSO12015	SET SCREW, SOCKET, 3/8-24 X 3/8
12	1	56187	SEAL KIT FOR 2" CYLINDER
*	1	66935	2.0" X 40" HYDRAULIC CYLINDER (3000 PSI)

FIGURE 14
OPTIONAL 2 WHEEL EXTENSION

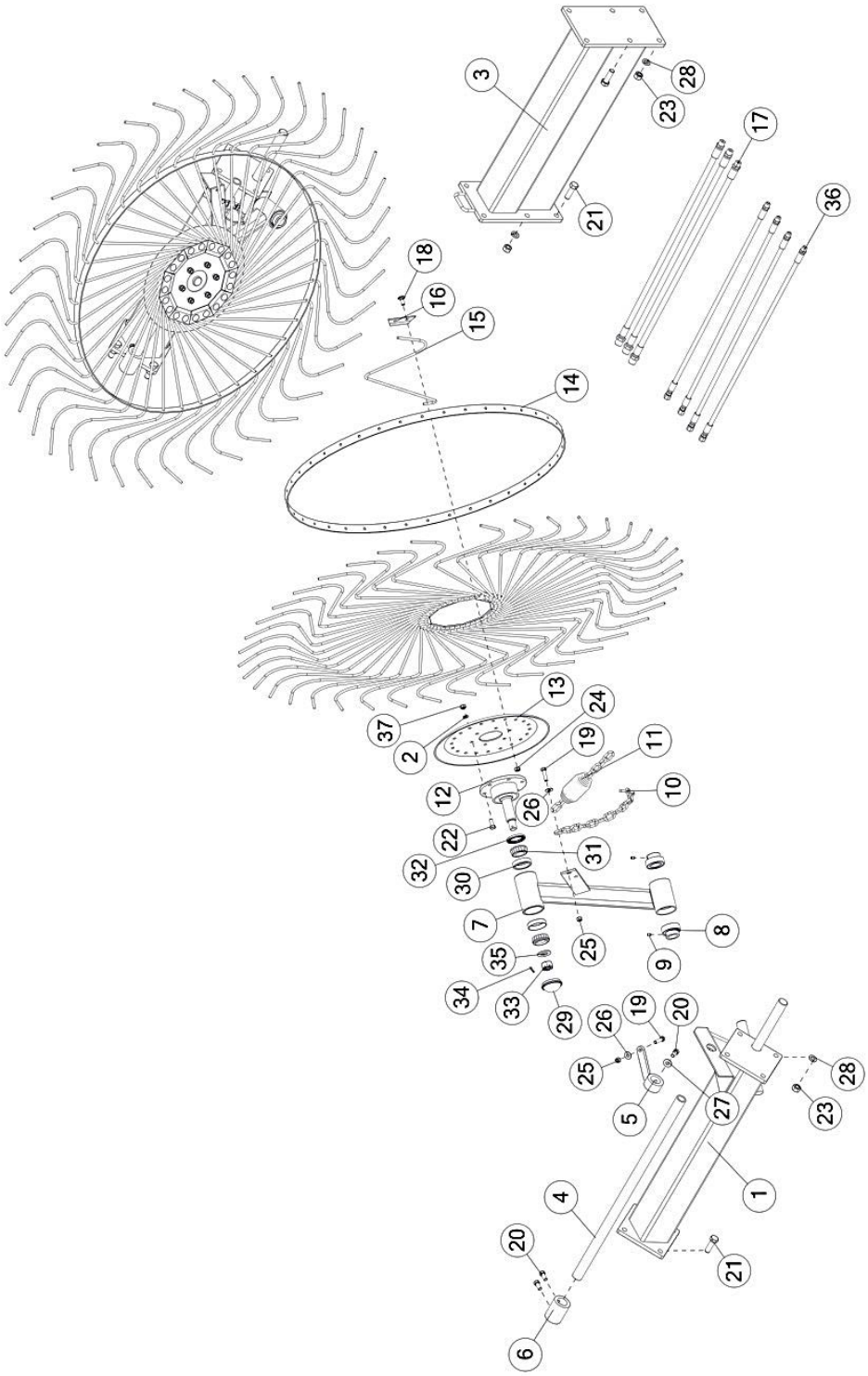

FIGURE 14
OPTIONAL 2 WHEEL EXTENSION

ITEM	QTY	PART #	DESCRIPTION
1	1	BFR733	ASSY, RAKE BEAM EXTENSION RIGHT
*	1	BFR734	ASSY, RAKE BEAM EXTENSION LEFT
2	12	YWLO12005	WASHER, LOCK, 3/8
3	1	67429	POLE EXTENSION
4	2	BFR536	LIFTING PIPE EXT
5	1	BFR431	ASSY, LH SPRING BRACKET
*	1	BFR430	ASSY, RH SPRING BRACKET
6	2	BFR537	LIFTING PIPE CONNECTOR
7	1	14DWE94	HI CAP HEAVY ARM RH
*	1	14DWE93	HI CAP HEAVY ARM LH
8	4	BFR525	FLAT BEARING 1-1/4", W/ LOCK COLLAR ASSEMBLY
9	4	YSKP10020	SET SCREW, SOCKET
10	2	BFR140	RAKE ARM ADJUSTMENT CHAIN
11	2	BFR138	SPRING
12	2	FR24	RAKE WHEEL HUB
13	2	FR71	RAKE WHEEL CENTER
14	2	FR72	RAKE WHEEL OUTER RING
15	80	FR73	BIGGY RAKE WHEEL TOOTH, 60", BLACK
16	20	FR74	RAKE TOOTH CLIP BLACK
17	3	BFR635	HOSE, 3/8" X 33" 1/2"FP & 1/2"MP
18	40	YBCR76005	CARR. BOLT, 10MM X 25MM
19	4	YBHH12025	BOLT, 3/8-16 X 1-1/2 GR 5
20	2	YBHH14005	BOLT, 7/16 X 1 GR 5
21	4	YBHH20025	BOLT, 5/8 X 2 GR 5
22	12	YBHH12035	BOLT, 3/8 X 1-1/4 GR 5
23	8	YNHX20010	HEX NUT, 5/8-18 GR 8
24	12	YNHX76015	HEX NUT, M10-1.5
25	4	YNTL12005	HEX NUT, TOP LOCK, 3/8-16
26	4	YWFL12005	WASHER, FLAT, 3/8 USS
27	2	YWFL14005	WASHER, FLAT, 7/16 USS
28	8	YWLO20005	WASHER, LOCK, 5/8
29	2	57875	HUB CAP - ZINC PLATED
30	2	58714	RACE
31	2	HD122	BRG, 2.14 X 1.25 X 0.81, TAPER
32	2	HD124	SEAL
33	2	YNSL28005	HEX NUT, SLOTTED, 7/8-14
34	2	YPCT05010	COTTER PIN 5/32" X 1-1/2"
35	2	YWFL28010	WASHER, FLAT, SAE 7/8
36	4	72142	HYD HOSE ASSY, 4 X 33, 6 JIC, 6 JIC
37	12	YNHX12005	HEX NUT, 3/8 - 16

*** MEANS NOT SHOWN**

FIGURE 15
OPTIONAL 2 WHEEL CENTER KICKER WHEEL

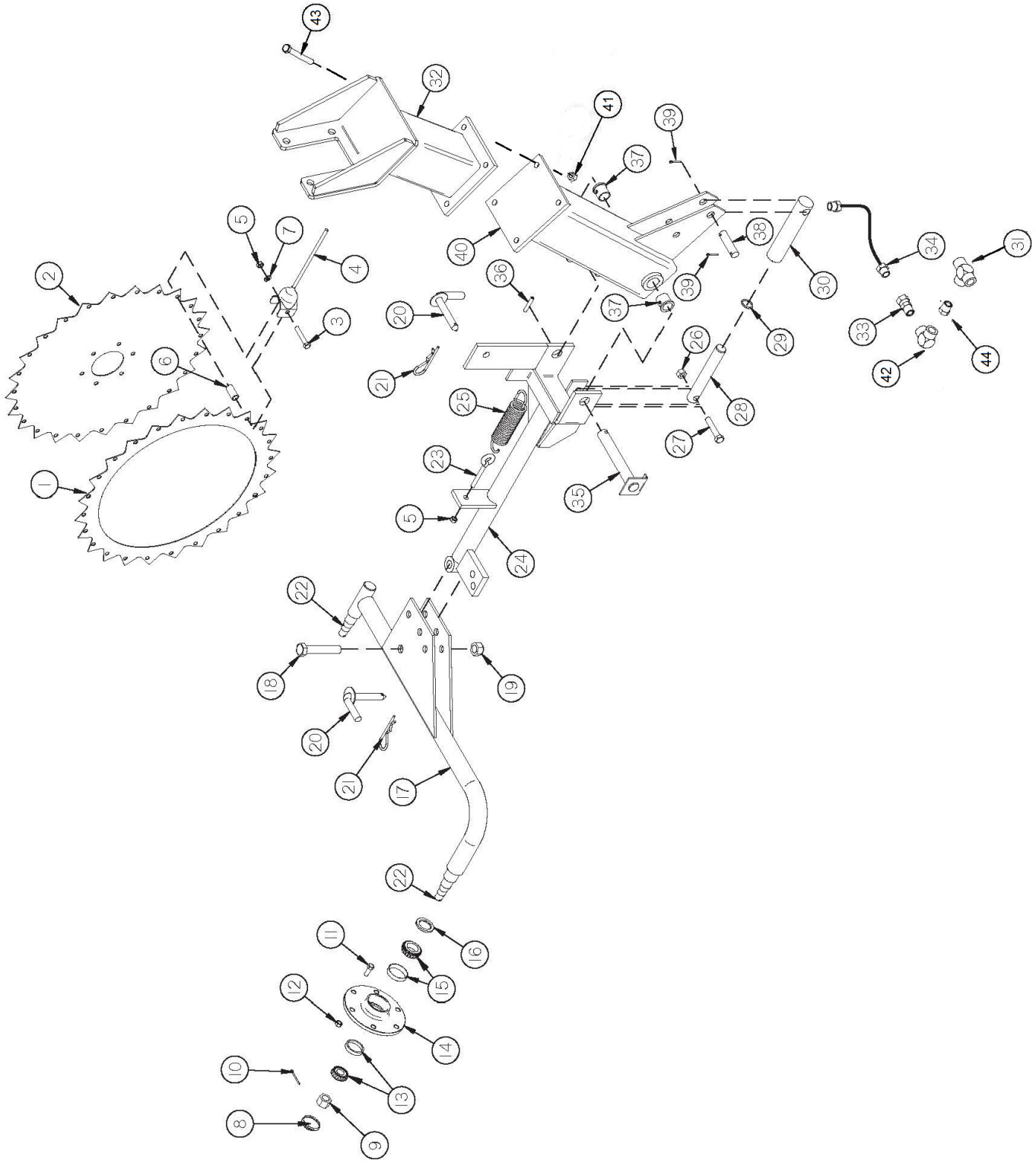

FIGURE 15

OPTIONAL 2 WHEEL CENTER KICKER WHEEL

ITEM	QTY	PART #	DESCRIPTION
1	1	BFR369	RAKE WHEEL RING
2	1	BFR370	RAKE WHEEL CENTER
3	1	YBHH12100	BOLT, 3/8" X 2-1/4" GR. 5
4	24	T82	RAKE WHEEL TOOTH
5	24	YNTL12005	HEX NUT, TOP LOCK, 3/8"-16
6	25	BFR371	RAKE WHEEL SPACER
7	24	YWLO12005	WASHER, LOCK, 3/8"
8	2	T173	HUB CAP
9	2	YNSL24010	HEX NUT, SLOTTED, 3/4"-16
10	3	YPCT05010	COTTER PIN, 5/32" X 1-1/2"
11	12	YBHH76005	BOLT, 10MM X 25MM
12	12	YNHX76015	HEX NUT, 10MM
13	2	600014	OUTER BEARING AND RACE
14	2	BFR32	RAKE WHEEL HUB
15	2	600012	INNER BEARING AND RACE
16	2	T163	SEAL
17	2	BFR511	CENTER KICKER WHEEL ARM
18	1	YBHH24050	BOLT, 3/4" X 3" GR. 5
19	1	YNTL24005	HEX NUT, TOP LOCK, 3/4"-10
20	1	BFR197	LOCKING PIN
21	1	YPHR02010	HAIR PIN, #21-07
22	2	BFR36	SPINDLE
23	4	YBTE12025	TURNED EYE BOLT, 3/8" X 3" FULL THREAD
24	1	BFR512	CENTER KICKER WHEEL PIVOT
25	1	BR62	SPRING
26	1	YNTL16005	HEX NUT, TOP LOCK, 1/2"-13
27	5	YBHH16080	BOLT, 1/2" X 2-1/2" GR. 5
28	1	BFR114	PISTON
29	1	BFR115	O-RING
30	1	BFR116	HYDRAULIC CYLINDER
31	1	CHM242	SWIVEL RUN TEE 6-R6X-S FITTING
32	1	73977	STANDOFF
*	1	BFR748	COMPLETE WHEEL ASSEMBLY
33	1	BFR122	3/8" MALE ADAPTER UNION
34	1	58723	3/8 MALE ADPTER WITH .062 ORIFICE
35	1	BFR379	AXLE SHAFT
36	1	YPEX10015	EXPANSION PIN, 5/16" X 1-3/4"
37	1	BFR27	BUSHING
38	1	BFR515	CYLINDER PIN
39	2	YPCT05010	COTTER PIN, 5/32" X 1-1/2"
40	2	BFR514	KICKER WHEEL OFFSET
41	4	YNRL16005	NUT, HEX, 1/2-13, LKRS, A, ZC
42	1	23N234	ELBOW, STREET, 3/8", 90 DEGREE # 5502-6-6
43	4	YBHH16050	BOLT, HEX, 1/2-12 X 1-3/4, G2, ZC
44	1	73993	FTG, ST, 6JIC, 6NPTF, STL

NOTE: * MEANS NOT SHOWN

FIGURE 16
OPTIONAL 3 WHEEL CENTER KICKER WHEEL

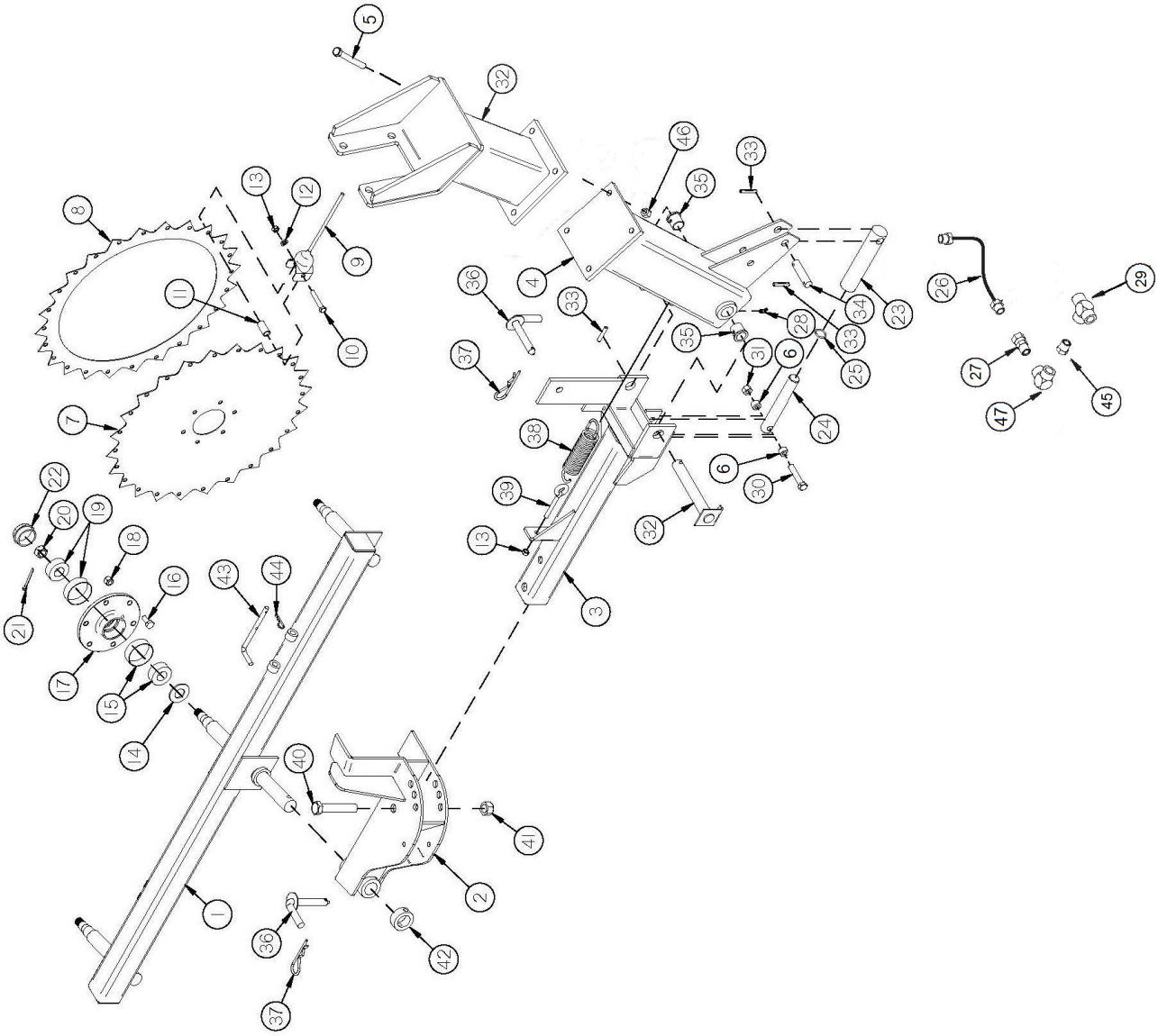

FIGURE 16

OPTIONAL 3 WHEEL CENTER KICKER WHEEL

ITEM	QTY	PART #	DESCRIPTION
1	1	BFR717	KICKER RAKE BEAM
2	1	BFR718	PIVOT
3	1	BFR719	SQUARE RAKE ARM
4	1	BFR514	KICKER WHEEL OFFSET
5	4	YBHH16050	BOLT, HEX, 1/2-12 X 1-3/4, G2, ZC
6	2	BFR722	LIFT CYLINDER SPACER
7	3	BFR370	RAKE WHEEL CENTER
8	3	BFR369	RAKE WHEEL RING
9	24	T82	RAKE WHEEL TOOTH
*	1	BFR748	COMPLETE WHEEL ASSEMBLY
10	24	YBHH12100	BOLT, 3/8" X 2-1/4" GR. 5
11	24	BFR371	RAKE WHEEL SPACER
12	24	YWLO12005	WASHER, LOCK, 3/8"
13	25	YNTL12005	HEX NUT, TOP LOCK, 3/8"-16
14	3	T163	SEAL
15	3	600012	INNER BEARING RACE
16	36	YBHH76005	BOLT, 10MM X 25MM
17	3	BFR32	RAKE WHEEL HUB
*	3	BFR76	COMPLETE HUB
18	36	YNHX76015	HEX NUT, 10MM
19	3	600014	OUTER BEARING RACE
20	3	YNSL24010	HEX NUT, SLOTTED, 3/4"-16
21	3	YPCT05010	COTTER PIN, 5/32" X 1-1/2"
22	3	T173	HUB CAP
23	1	BFR116	HYDRAULIC CYLINDER
24	1	BFR114	PISTON
25	1	BFR115	O-RING
26	1	BFR121	HOSE, 32"
27	1	58723	3/8 MALE ADPTER WITH .062 ORIFICE
28	1	RG21	GREASE ZERK, 45 DEGREE
29	1	CHM242	TEE SWIVEL RUN (6 R6X-S)
30	1	YBHH16115	BOLT, 1/2" X 3-1/2" GR. 5
31	1	YNTL16005	HEX NUT, TOP LOCK, 1/2"-13
32	1	73977	STANDOFF WLDMT, KICKER WHEEL
33	3	YPEX10015	EXPANSION PIN, 5/16" X 1-3/4"
34	1	BFR515	CYLINDER PIN
35	2	BFR27	BUSHING
36	2	BFR197	LOCKING PIN
37	2	YPHR02010	HAIR PIN, #21-07
38	1	BR62	SPRING
39	1	YBTE12025	TURNED EYE BOLT, 3/8" X 3" FULL THREAD
40	1	YBHH24070	BOLT, 3/4-10" X 4" GR. 5
41	1	YNTL24005	HEX NUT, TOP LOCK, 3/4"-10
42	1	BFR720	PIVOT LOCK COLLAR
43	1	BFR721	BEAM LOCK PIN
44	1	YPHR02005	HAIR PIN, #21-05 (1-7/8" LONG, 3/8-7/16" SHAFT)
45	4	73993	FTG, ST,6JIC, 6NPTF, STL"
46	4	YNRL16005	NUT, HEX, 1/2-13, LKRS, A, ZC
47	1	23N234	ELBOW, STREET, 3/8", 90 DEGREE

*** MEANS NOT SHOWN**

FIGURE 17
WIND GUARD

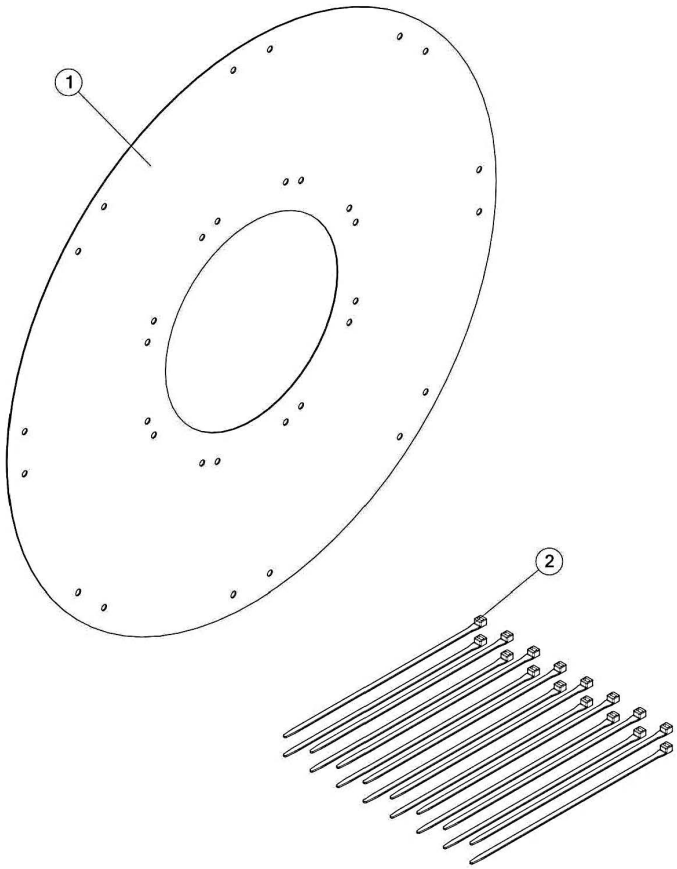

FIGURE 17
OPTIONAL WIND GUARD

ITEM	QTY	PART #	DESCRIPTION
1	1	59039	POLY WIND GAURD, FOR 60" RAKE
2	16	57626	15 INCH 120# BLACK CABLE TIE

FIGURE 18
OPTIONAL RAKE LIGHTS

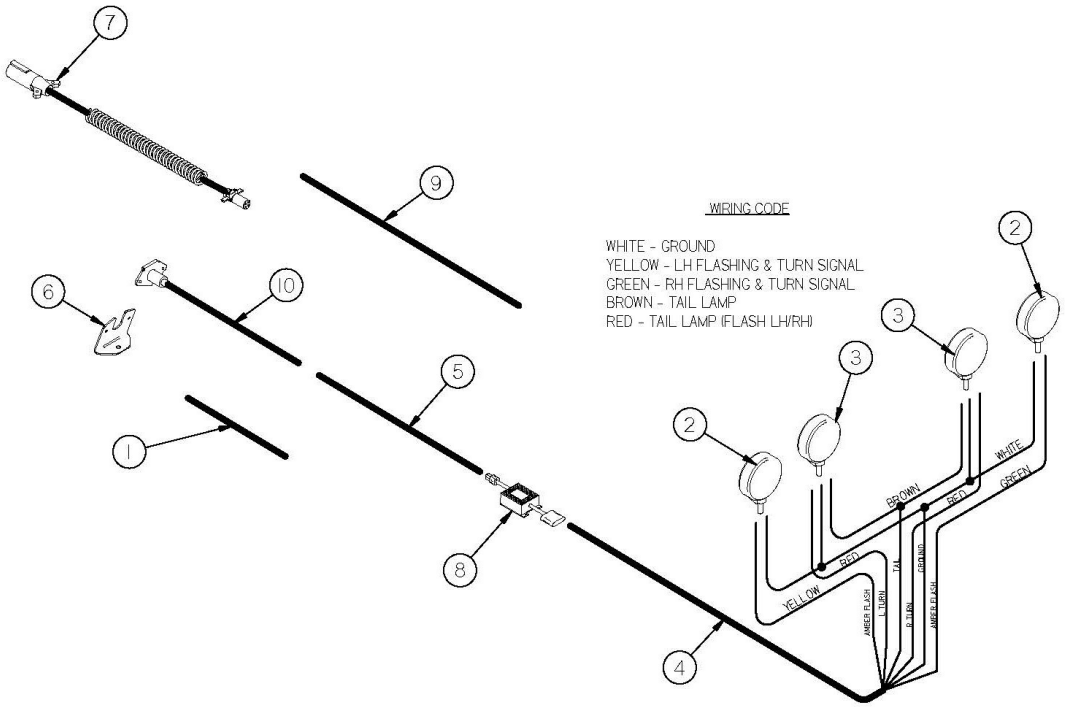

FIGURE 18
OPTIONAL RAKE LIGHTS

ITEM	QTY	PART #	DESCRIPTION
1	1	BFR666	16 WHEEL EXT. LIGHT HARNESS
2	2	DWM129	AMBER LIGHT
3	2	BFR675	RED LIGHT
4	1	BFR667	LIGHT HARNESS (6 WIRE)
5	1	BFR705	14 WHEEL LIGHT HARNESS
6	1	BFR659	MOUNTING BRACKET
7	1	TLPC	TRANSPORT LIGHT CORD
8	1	69908	MODULE, CONTROL, BLINKER
9	1	BFR668	12 WHEEL LIGHT HARNESS
10	1	BFR706	FRONT PIGTAIL
*	1	BFR707	14 WHEEL COMP. LIGHT HARNESS LESS OPTIONAL CORD

*** MEANS NOT SHOWN**

PARTS NOTES

H&S Manufacturing products are approved for the
FEMA SEAL OF QUALITY

P.O. BOX 768, MARSHFIELD, WI 54449
(715) 387-3414 FAX (715) 384-5463
www.hsmfgco.com