H&S PARTS BOOK

# HC4114
# RAKE

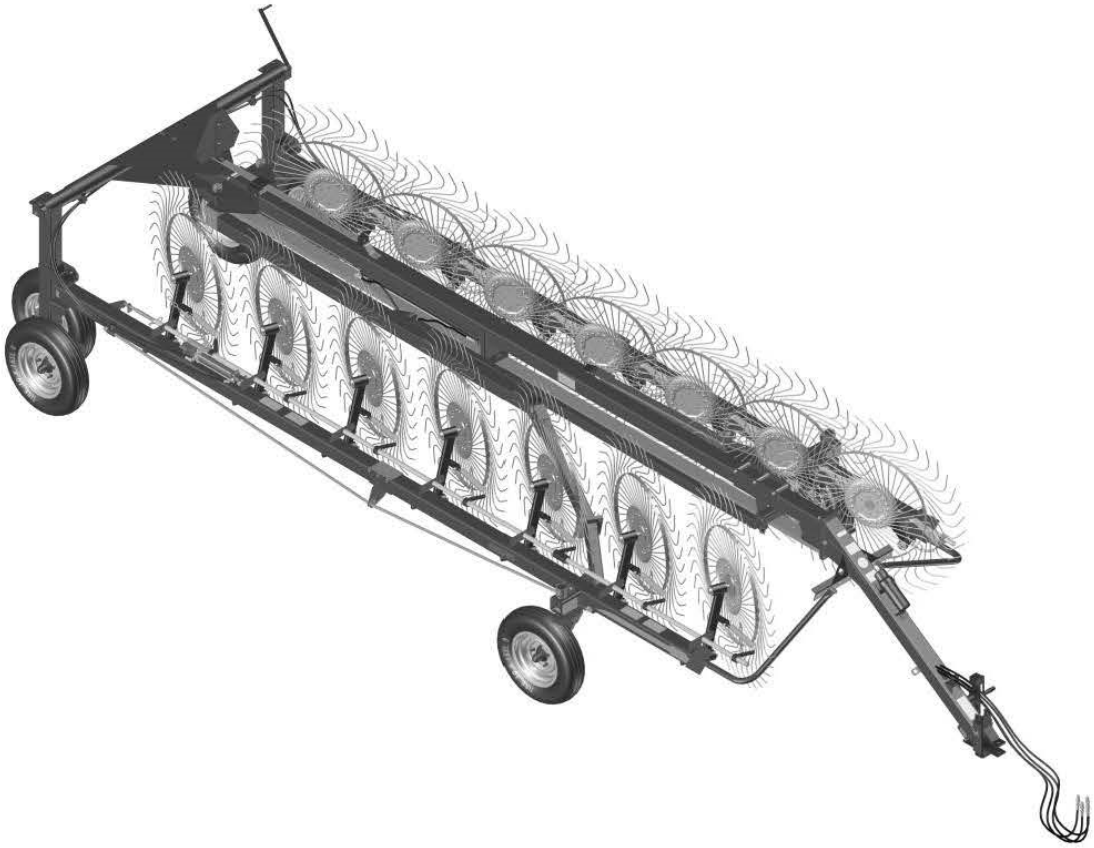

Revision #**04**
Starting Ser. **#811HC14001**

Part **#73133**
HSMFG0917

**P.O. BOX 768, MARSHFIELD, WI 54449**
**(715) 387-3414 FAX (715) 384-5463**
**www.hsmfgco.com**

# CONTENTS

Instructions For Ordering Parts – About Improvements .....1

Figure 1 - Front Pole Assembly ..... 2-3

Figure 2 – Frame & Components ..... 4-5

Figure 3 – Back Linkage Assembly ..... 6-7

Figure 4 – Rear Pivot & Components ..... 8-9

Figure 5 – Rear Hub Assembly ..... 10-11

Figure 6 – Linkage Assembly ..... 12-13

Figure 7 – RH Rake Beam Assembly ..... 14-15

Figure 8 – LH Rake Beam Assembly ..... 16-17

Figure 9 – Rake Wheel Assembly ..... 18-19

Figure 10 – Hub & Brake Assembly ..... 20-21

Figure 11 – Hydraulics ..... 22-23

Figure 12 – Hydraulic Lift Cylinder ..... 24-25

Figure 13 – Hydraulic Opening Cylinder ..... 26-27

Figure 14 – Optional 15” Gauge Wheel ..... 28-29

Figure 15 – Optional 2 Wheel Extension ..... 30-31

Figure 16 – Optional 2 Wheel Center Kicker Wheel ..... 32-33

Figure 17 – Optional 3 Wheel Center Kicker Wheel ..... 34-37

Figure 18 – Optional Wind Guar ..... 38-39

Figure 19 – Optional Rake Lights ..... 40-41

Figure 20 – Optional Tire&Wheel ..... 42-43

Figure 21 – Optional Wrap Around Kit .....44-45

Parts Notes - . .....46

# INSTRUCTIONS FOR ORDERING PARTS

All service parts should be ordered through your authorized H&S dealer. They will be able to give you faster service if you will provide them with the following

1. Model & Serial number is located on the left, rear main frame of your unit.
2. All reference to left or right apply to the machine as viewed from the rear.
3. Parts should not be ordered from illustration only. Please order by complete part number.
4. If your dealer has to order parts - give shipping instructions:

   VIA truck - large pieces (please specify local truck lines)

   VIA United Parcel Service (include full address)

H&S MFG. CO. INC.
MARSHFIELD, WIS.

MOD. NO.

SER. NO.

DESCR.

PLEASE RECORD NUMBERS FOR YOUR UNIT FOR QUICK REFERENCE

**ABOUT IMPROVEMENTS**

H&S IS CONTINUALLY STRIVING TO IMPROVE IT'S PRODUCTS

We must therefore, reserve the right to make improvements or changes whenever it becomes practical to do so without incurring any obligation to make changes or additions to the equipment previously sold.

# FIGURE 1
# FRONT POLE ASSEMBLY

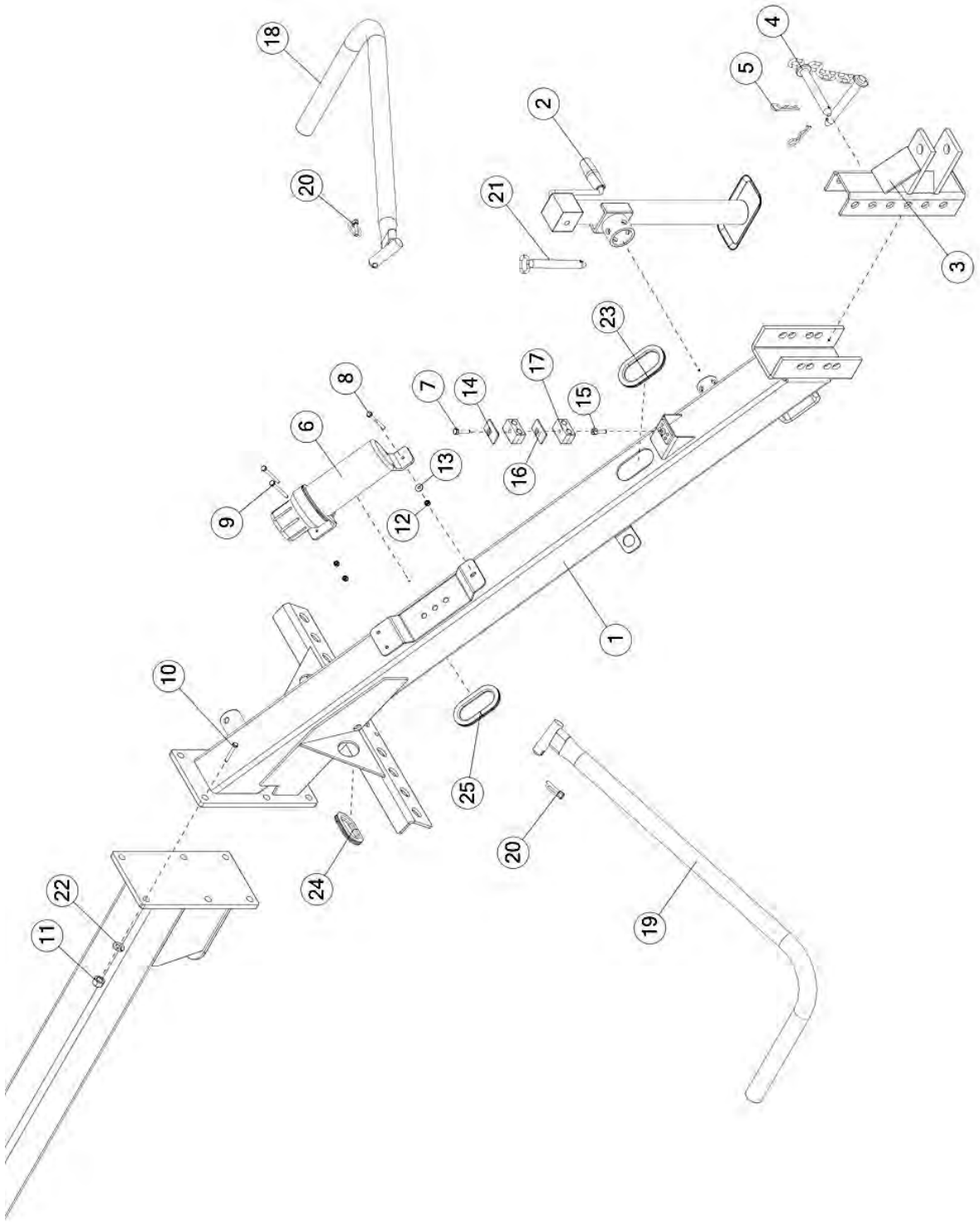

# FIGURE 1

# FRONT POLE ASSEMBLY

| ITEM | QTY | PART # | DESCRIPTION |
|---|---|---|---|
| 1 | 1 | 67220 | ASSM, POLE FRONT |
| 2 | 2 | BFR753A | JACK, SIDEWIND,2000# |
| 3 | 1 | BFR157 | ASSM, HITCH |
| 4 | 1 | BFR450 | ASSM, HITCH PIN |
| 5 | 2 | YPHR02010 | HAIR PIN, #21-07 |
| 6 | 1 | S522 | MANUAL HOLDER |
| 7 | 1 | 56568 | CLAMP BOLT |
| 8 | 1 | YBHH08010 | BOLT, 1/4 X 1 GR 5 |
| 9 | 2 | YBHH08100 | BOLT, 1/4 X 3/4 GR 5 |
| 10 | 6 | YBHH20025 | BOLT, 5/8 X 2 GR 5 |
| 11 | 6 | YNHX20010 | HEX NUT, 5/8-18 GR 8 |
| 12 | 3 | YNNY08005 | HEX NUT, NYLON LOCKNUT, 1/4-20 |
| 13 | 3 | YWFL08005 | WASHER, FLAT, 1/4 USS |
| 14 | 1 | 56563 | CLAMP TOP PLATE |
| 15 | 1 | 56573 | CLAMP STACKING BOLT |
| 16 | 1 | 56581 | CLAMP TOP PLATE |
| 17 | 2 | 67354 | HOSE CLAMP, DOUBLE, 1/4" |
| 18 | 1 | BFR452 | ASSM, TRANSPORT LOCK PIPE LH |
| 19 | 1 | BFR492 | ASSM, TRANSPORT LOCK PIPE RH |
| 20 | 2 | YPLY08011 | LYNCH PIN, 1/4 X 1-9/16 |
| 21 | 1 | 12N117 | PIN, 0.56, 5.19, JACK |
| 22 | 6 | YWLO20005 | WASHER, LOCK, 5/8 |
| 23 | 1 | 67443 | TRIM, PLASTIC, .19 X 10.3, METAL CORE |
| 24 | 1 | 67448 | TRIM, PLASTIC, .25 X 7.68, METAL CORE |
| 25 | 1 | 67442 | TRIM, PLASTIC, 0.25X10.3, METAL CORE |

# FIGURE 2
# FRAME & COMPONENTS

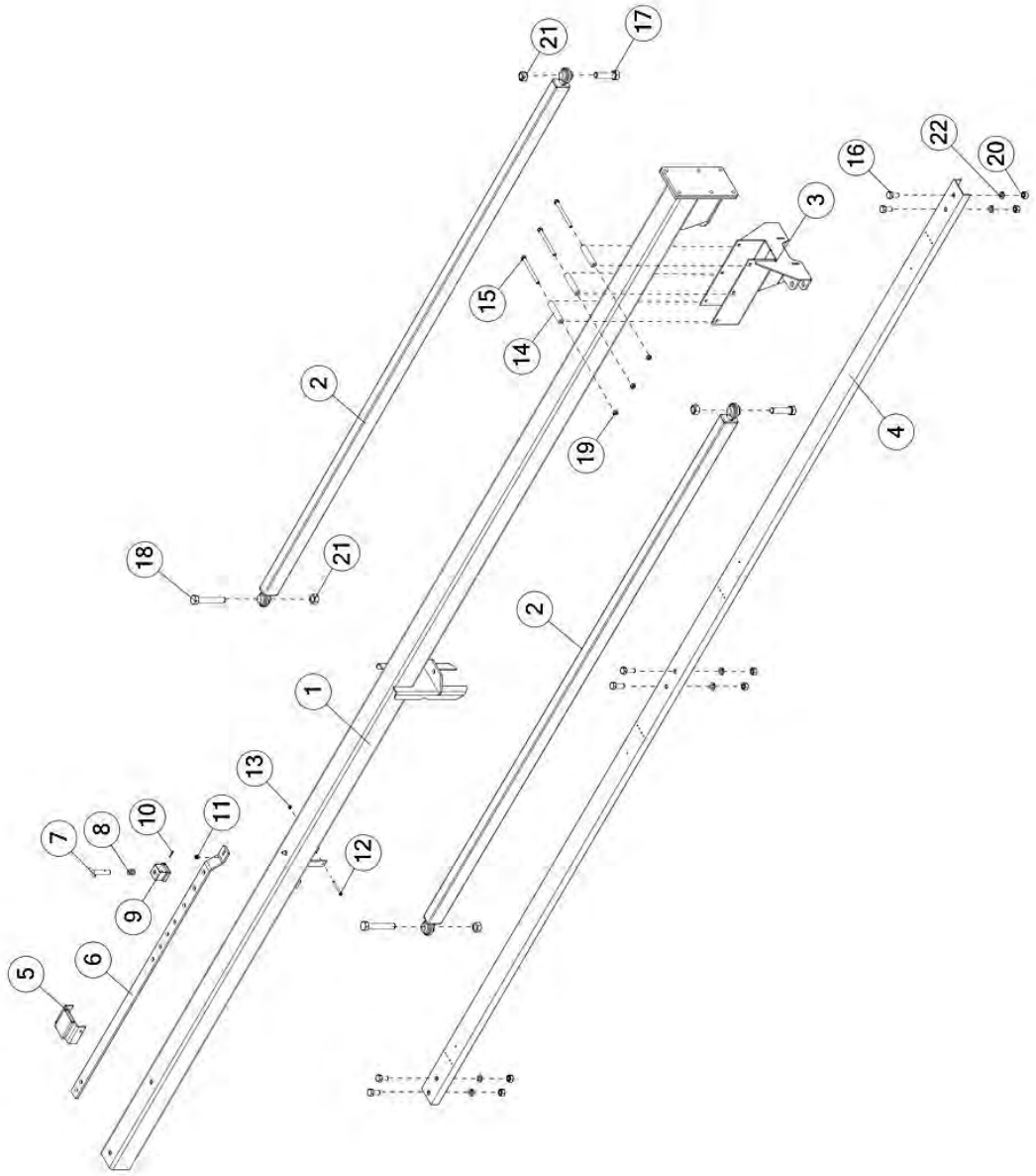

# FIGURE 2

# FRAME & COMPONENTS

| ITEM | QTY | PART # | DESCRIPTION |
|---|---|---|---|
| 1 | 1 | 67236 | ASSM, POLE, CENTER |
| 2 | 2 | BFR458 | ASSM, FRONT LINKAGE |
| 3 | 1 | 73141 | SLIDER WLDMT, FRONT |
| 4 | 1 | 70181 | CHL, C, 4.00 X 1.58 X 226.31 |
| 5 | 1 | 67368 | WLDMT, STOP, ADJUSTMENT |
| 6 | 1 | 67416 | BRKT, ADJUSTMENT |
| 7 | 1 | BFR241 | ADJUSTMENT HANDLE |
| 8 | 1 | BFR240 | SPRING |
| 9 | 1 | BFR239 | ASSY, SLEEVE LOCK ADJUSTMENT |
| 10 | 1 | YPCT05005 | COTTER PIN, 5/32 X 1 |
| 11 | 1 | YBFL10002 | SCR, FLG, 0.75-10 X 4.00, G8, PO |
| 12 | 1 | YBHH08114 | BOLT, 1/4 X 4 GR 5 |
| 13 | 1 | YNTL08005 | HEX NUT, TOP LOCK, 1/4-20 |
| 14 | 3 | BFR457 | TUBE, RND, STR, 1.00 X 0.23 X 4.56 |
| 15 | 3 | YBHH16165 | BOLT, 1/2 X 6 GR 5 |
| 16 | 6 | YBHH24012 | 3/4-10 X 1-1/2 GRADE 8 BOLT |
| 17 | 2 | YBHH32015 | BOLT, 1"-8 X 4 GR 5 |
| 18 | 2 | YBHH32025 | BOLT, 1"-8 X 6 GR 5 |
| 19 | 3 | YNTL16005 | HEX NUT, TOP LOCK, 1/2-13 |
| 20 | 6 | YNHX24004 | HEX NUT, 3/4-10 GR 5 |
| 21 | 4 | YNTL32005 | HEX NUT, TOP LOCK, 1"-8 GR. C, ZINC |
| 22 | 6 | YWLO24005 | WASHER, LOCK, 3/4 |

# FIGURE 3
# BACK LINKAGE ASSEMBLY

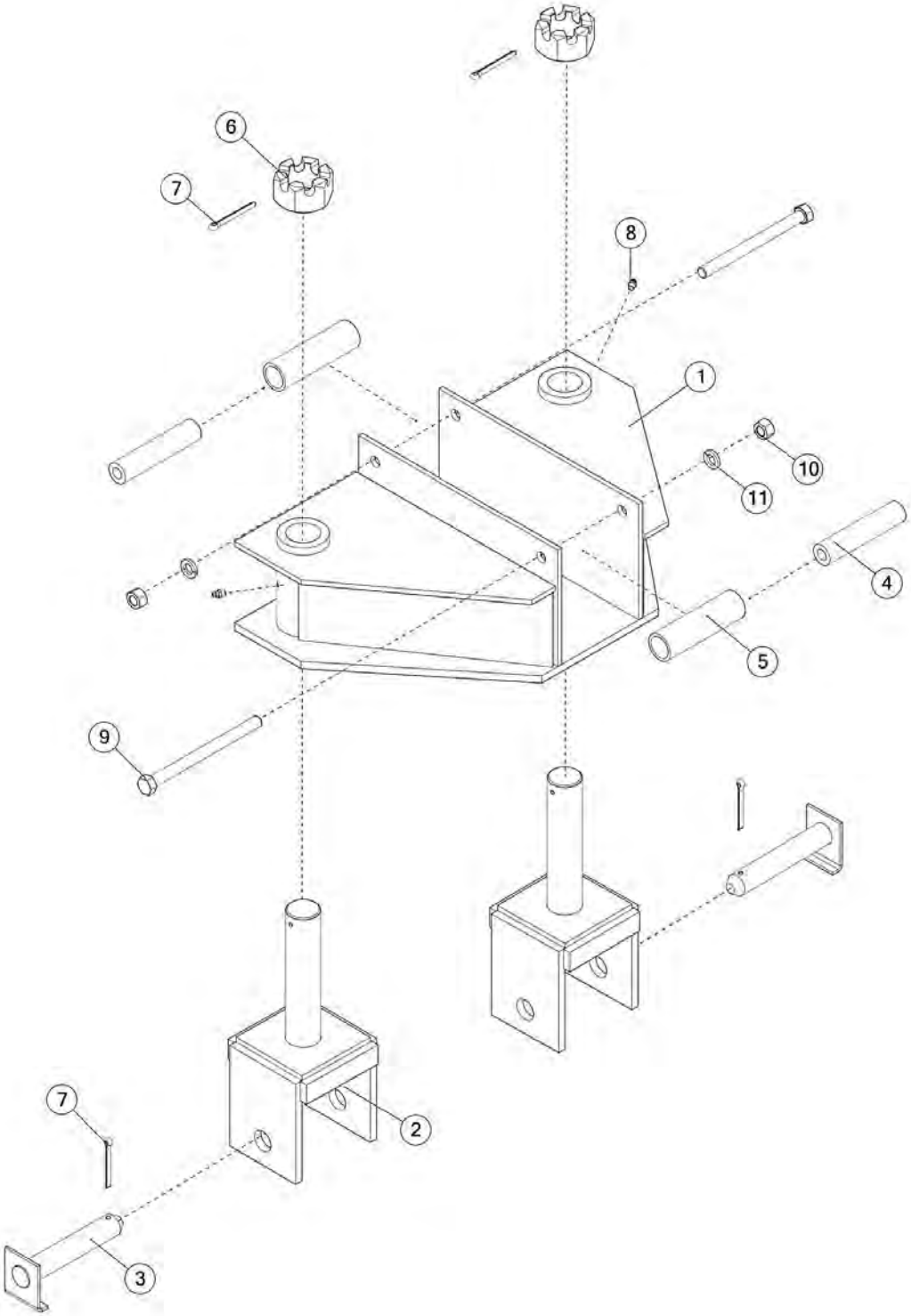

# FIGURE 3

# BACK LINKAGE ASSEMBLY

| ITEM | QTY | PART # | DESCRIPTION |
|---|---|---|---|
| 1 | 1 | BFR491 | ASSM, BACK LINKAGE SLIDER |
| 2 | 2 | BFR476 | ASSM, BACK LINKAGE YOKE |
| 3 | 2 | BFR479 | ASSM, PIVOT YOKE SHAFT PIN |
| 4 | 2 | BFR457 | TUBE, RND, STR, 1.00 X 0.23 X 4.56 |
| 5 | 2 | BFR471 | BACK SLIDER ROLLER |
| 6 | 2 | YNSL40005 | HEX NUT, SLOTTED, 1-1/2"-12 |
| 7 | 4 | YPCT07005 | COTTER PIN, 7/32 X 2 |
| 8 | 2 | G89 | ZERK, 1/4"-28 STRAIGHT |
| 9 | 2 | YBHH16175 | BOLT, 1/2 X 6-1/2 GR 5 |
| 10 | 2 | YNHX16005 | HEX NUT, 1/2 |
| 11 | 2 | YWLO16005 | WASHER, LOCK, 1/2 |

# FIGURE 4
# REAR PIVOT & COMPNENTS

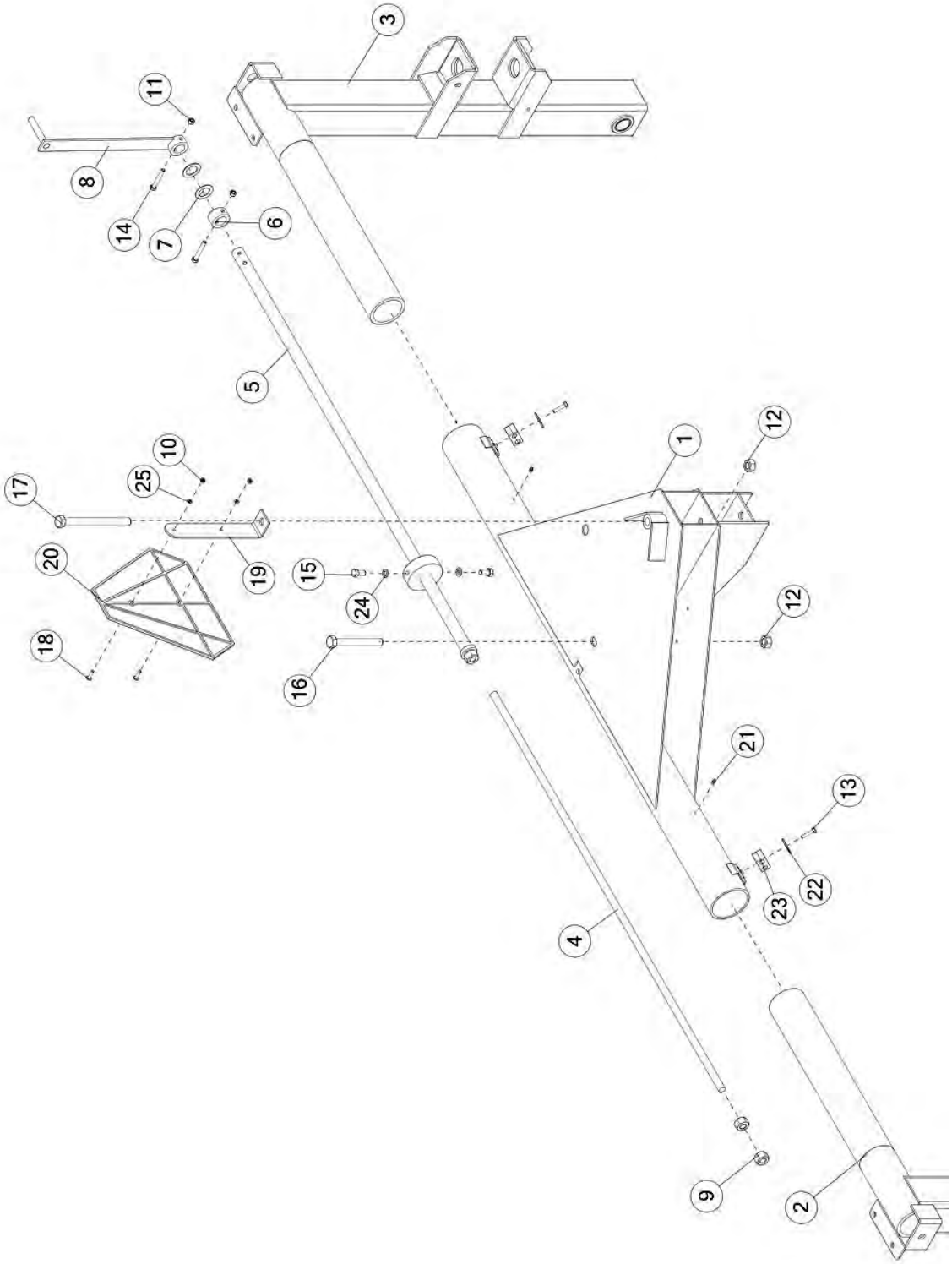

# FIGURE 4

# REAR PIVOT & COMPONENTS

| ITEM | QTY | PART # | DESCRIPTION |
|---|---|---|---|
| 1 | 1 | 67320 | REAR PIVOT |
| 2 | 1 | 66841 | WLDMT, FRAME, UPRIGHT, RH |
| 3 | 1 | 66837 | WLDMT, FRAME, UPRIGHT, LH |
| 4 | 1 | 66845 | REAR WIDTH ADJUSTMENT ROD |
| 5 | 1 | 66839 | REAR WIDTH ADJUSTMENT TUBE |
| 6 | 1 | BFR422 | WIDTH ADJUSTMENT COLLAR |
| 7 | 2 | BFR523 | POLY WASHER |
| 8 | 1 | BFR423 | ASSM, WIDTH ADJUSTMENT HANDLE |
| 9 | 2 | YNAC24005 | HEX NUT, ACME, 3/4-6 |
| 10 | 2 | YNHX08005 | HEX NUT, 1/4 |
| 11 | 2 | YNHX12005 | HEX NUT, 3/8-16 GR 2 |
| 12 | 2 | YNTL24005 | HEX NUT, TOP LOCK, 3/4-10 |
| 13 | 2 | 56568 | CLAMP BOLT |
| 14 | 2 | YBHH12090 | BOLT, 3/8 X 2-1/2 GR 5 |
| 15 | 2 | YBHH16010 | BOLT, 1/2 X 1 GR 5 |
| 16 | 1 | YBHH24090 | BOLT, 3/4 X 6 GR 5 |
| 17 | 1 | YBHH24115 | BOLT, 3/4 X 8-1/2 GR 5 |
| 18 | 2 | YSTM08005 | TRUSS HEAD MACH, SCREW, 1/4-20 X 1 GR.5 ZINC |
| 19 | 1 | BFR649 | SMV BRACKET |
| 20 | 1 | BFR723 | SMV SIGN |
| 21 | 2 | G89 | ZERK, 1/4"-28 STRAIGHT |
| 22 | 2 | 56563 | CLAMP TOP PLATE |
| 23 | 2 | 67354 | HOSE CLAMP, DOUBLE, 1/4" |
| 24 | 2 | YWLO16005 | WASHER, LOCK, 1/2 |
| 25 | 2 | YWLO08005 | WASHER, LOCK, 1/4 |

# FIGURE 5
# REAR HUB ASSEMBLY

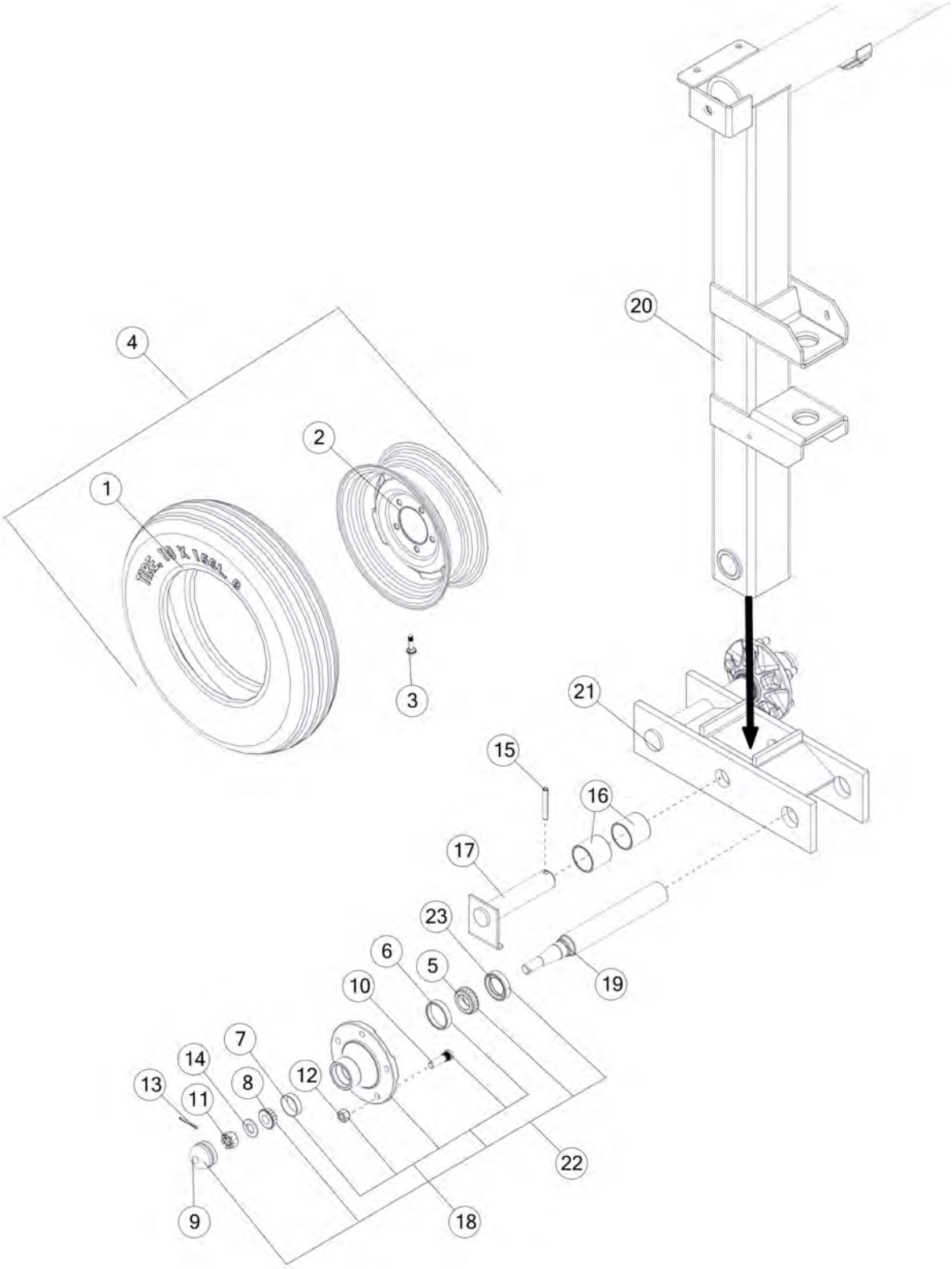

# FIGURE 5
# REAR HUB ASSEMBLY

| ITEM | QTY | PART # | DESCRIPTION |
|---|---|---|---|
| 1 | 4 | BFR128 | TIRE 670 X 15 |
| * | 4 | 75696 | ST205/75R15-C RADIAL TIRE (OPTIONAL) |
| 2 | 4 | BFR67 | WHEEL, 5" X 15" |
| 3 | 4 | 72436 | VALVE STEM, 1-1/2" RUBBER |
| 4 | 4 | 32006 | 6.70-15 TIRE ON 5" X 15" WHEEL |
| * | 4 | 75697 | 205/75R15 TIRE ON AG WHEEL (OPTIONAL) |
| 5 | 4 | 17G145 | TAPERED ROLLER BEARING, 1.249 BORE |
| 6 | 4 | BFR59 | RACE |
| 7 | 4 | BFR61 | CUP |
| 8 | 4 | BFR62 | CONE BEARING |
| 9 | 4 | BFR66 | HUB CAP |
| 10 | 20 | YBSD16005 | BOLT, STUD, 1/2-20UNF X 1-7/8 X 3/8, G5, ZC |
| 11 | 4 | YNSL24010 | NUT, SLOT, 3/4-16, NA, G2, NF |
| 12 | 20 | YNWL16005 | NUT, WHEEL, 1/2-20, NA, G5, ZC |
| 13 | 4 | YPCT05010 | COTTER PIN, 5/32 X 1-1/2 |
| 14 | 4 | YWFL24010 | WASHER, FLAT, SAE 3/4, PLAIN EXPANSION |
| 15 | 4 | YPEX12025 | PIN, 3/8" X 2-3/4" |
| 16 | 4 | BFR625 | BUSHING, BRONZE, 1-3/4" X 1-1/2" X 2-1/2" |
| 17 | 2 | BFR524 | ASSY, TANDEM PIN |
| 18 | 4 | BFR60 | HUB, WITH RACES AND STUDS |
| 19 | 4 | BFR522 | SPINDLE |
| 20 | 1 | 66841 | WLDMT, FRAME, UPRIGHT, RH |
| * | 1 | 66837 | WLDMT, FRAME, UPRIGHT, LH |
| 21 | 1 | BFR509 | ASSY, RH TANDEM AXLE |
| * | 1 | BFR510 | ASSY, LH TANDEM AXLE |
| 22 | 4 | BFR75 | HUB ASSY |
| 23 | 4 | 60699 | SEAL |

*** MEANS NOT SHOWN**

# FIGURE 6
# LINKAGE ASSEMBLY

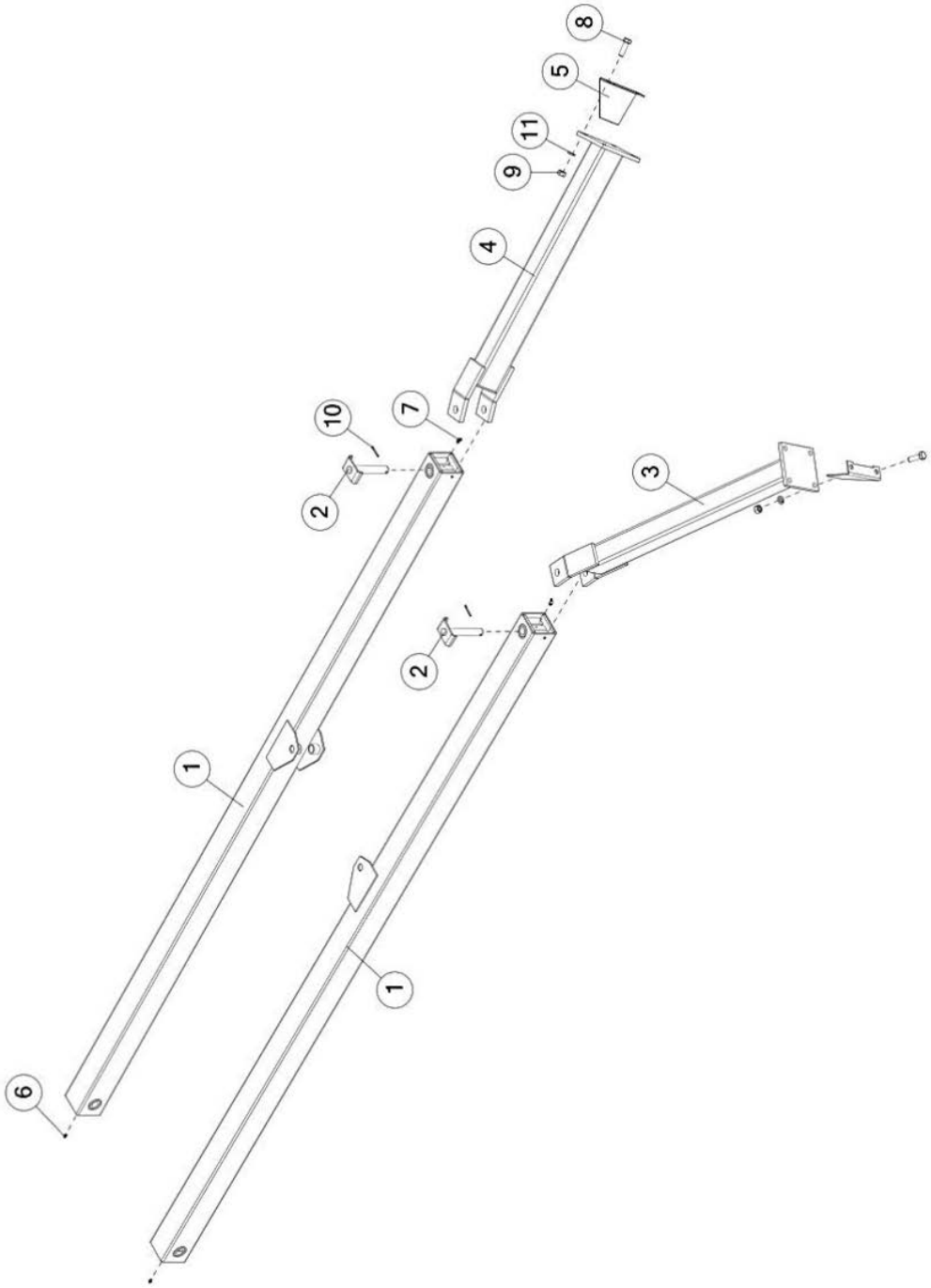

# FIGURE 6
# LINKAGE ASSEMBLY

| ITEM | QTY | PART # | DESCRIPTION |
|---|---|---|---|
| 1 | 2 | BFR462 | ASSM, RIGHT REAR LINKAGE |
| 2 | 2 | BFR461 | ASSM, RAKE BEAM ARM PIN |
| 3 | 1 | BFR744 | ASSM, RAKE BEAM ARM, RH |
| 4 | 1 | BFR745 | ASSM, RAKE BEAM ARM, LH |
| 5 | 2 | BFR549 | TOOTH DEFLECTOR |
| 6 | 2 | G89 | ZERK, 1/4"-28 STRAIGHT |
| 7 | 2 | RG21 | GREASE ZERK, 45 DEGREE |
| 8 | 8 | YBHH20025 | BOLT, 5/8 X 2 GR 5 |
| 9 | 8 | YNHX20010 | HEX NUT, 5/8-18 GR 8 |
| 10 | 2 | YPCT05010 | COTTER PIN 5/32" X 1-1/2" |
| 11 | 8 | YWLO20005 | WASHER, LOCK, 5/8 |

# FIGURE 7
# RH RAKE BEAM ASSEMBLY

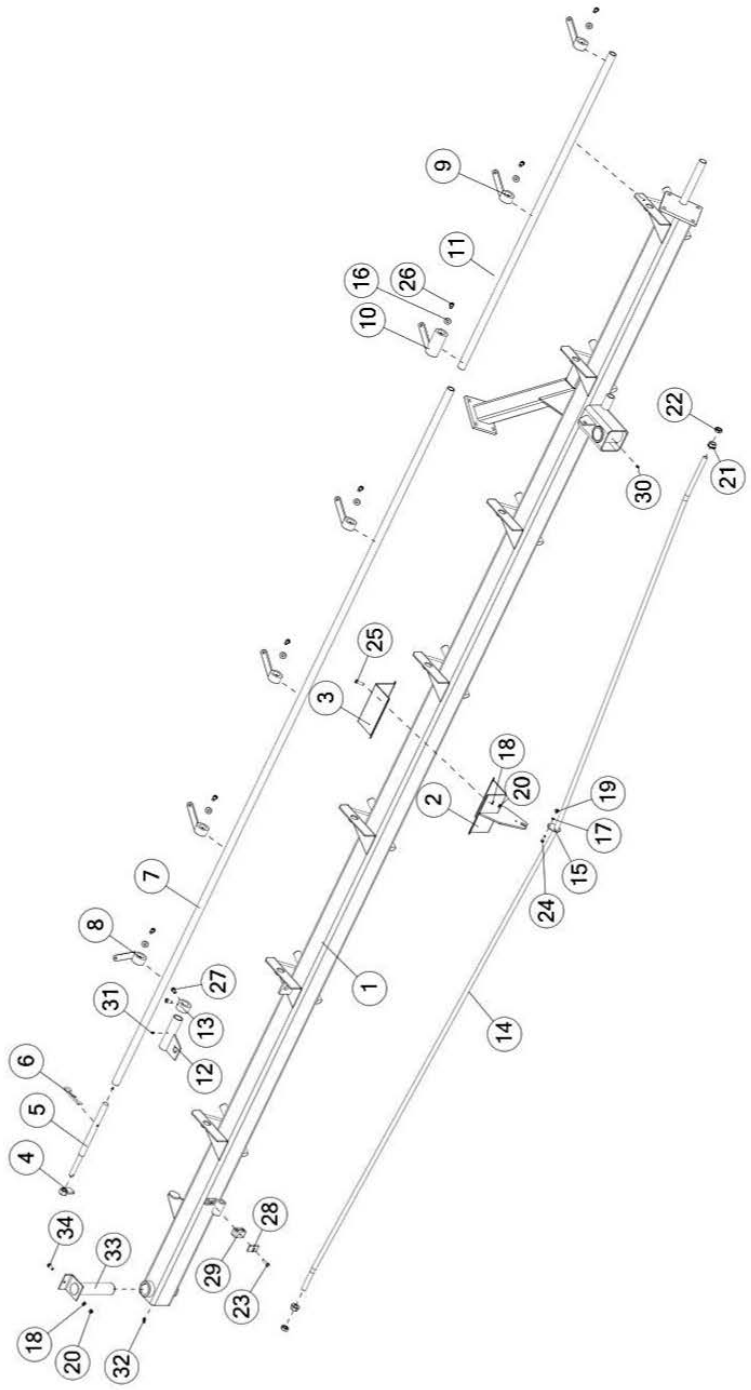

# FIGURE 7
# RH RAKE BEAM ASSEMBLY

| ITEM | QTY | PART # | DESCRIPTION |
|---|---|---|---|
| 1 | 1 | 67336 | ASSM, BEAM WITH DECALS, RH |
| 2 | 1 | 14DWE85 | ROD STANDOFF |
| 3 | 1 | 14D3G18 | ROD STAND-OFF BRACKET |
| 4 | 1 | BFR426 | ASSM, RAKE PRESSURE HANDLE |
| 5 | 1 | BFR486 | ASSM, RAKE ARM LOCK-UP SHAFT |
| 6 | 1 | YPHR08040 | HAIR PIN, 1/4" X 5" 2109 |
| 7 | 1 | BFR521 | LIFTING PIPE BACK |
| 8 | 1 | BFR431 | ASSM, SPRING BRACKET, LH |
| 9 | 4 | BFR430 | ASSM, SPRING BRACKET, RH |
| 10 | 1 | BFR749 | ASSM, LONG LIFT PIPE CONNECTOR, RH |
| 11 | 1 | BFR520 | FRONT LIFT PIPE |
| 12 | 1 | BFR531 | ASSM, HYDRAULIC CYLINDER END SLIDE, RH |
| 13 | 1 | BFR83 | PIPE CLAMP |
| 14 | 1 | BFR612 | SIDE ARM STABILIZER ROD |
| 15 | 1 | DF22 | RING FOR STRAP |
| 16 | 7 | YWFL14005 | WASHER, FLAT, 7/16 USS |
| 17 | 2 | YWLO08005 | WASHER, LOCK, 1/4 |
| 18 | 7 | YWLO12005 | WASHER, LOCK, 3/8 |
| 19 | 1 | YNHX08005 | HEX NUT, 1/4 |
| 20 | 7 | YNHX12005 | HEX NUT, 3/8-16 GR 2 |
| 21 | 2 | BFR618 | FLANGE NUT, NF, 3/4"-16 |
| 22 | 2 | YNJM24011 | HEX NUT, JAM, 3/4-16 |
| 23 | 1 | 56568 | CLAMP BOLT |
| 24 | 1 | YBHH08010 | BOLT, 1/4 X 1 GR 5 |
| 25 | 6 | YBHH12035 | BOLT, 3/8 X 1-1/4 GR 5 FULL THREAD |
| 26 | 7 | YBHH14005 | BOLT, 7/16 X 1 GR 5 |
| 27 | 2 | YBHH14035 | BOLT, 7/16 X 3/4 GR 5 |
| 28 | 1 | 56563 | CLAMP TOP PLATE |
| 29 | 1 | 67354 | HOSE CLAMP, DOUBLE, 1/4" |
| 30 | 1 | G89 | ZERK, 1/4"-28 STRAIGHT |
| 31 | 1 | MS26 | 1/4" - 28, STRAIGHT STANDARD SHORTGREASE FITTING |
| 32 | 1 | RG21 | GREASE ZERK, 45 DEGREE |
| 33 | 1 | BFR756 | BEAM PIVOT SHAFT |
| 34 | 1 | YBHH12010 | BOLT, 3/8 X 1 GR 5 |

# FIGURE 8
# LH RAKE BEAM ASSEMBLY

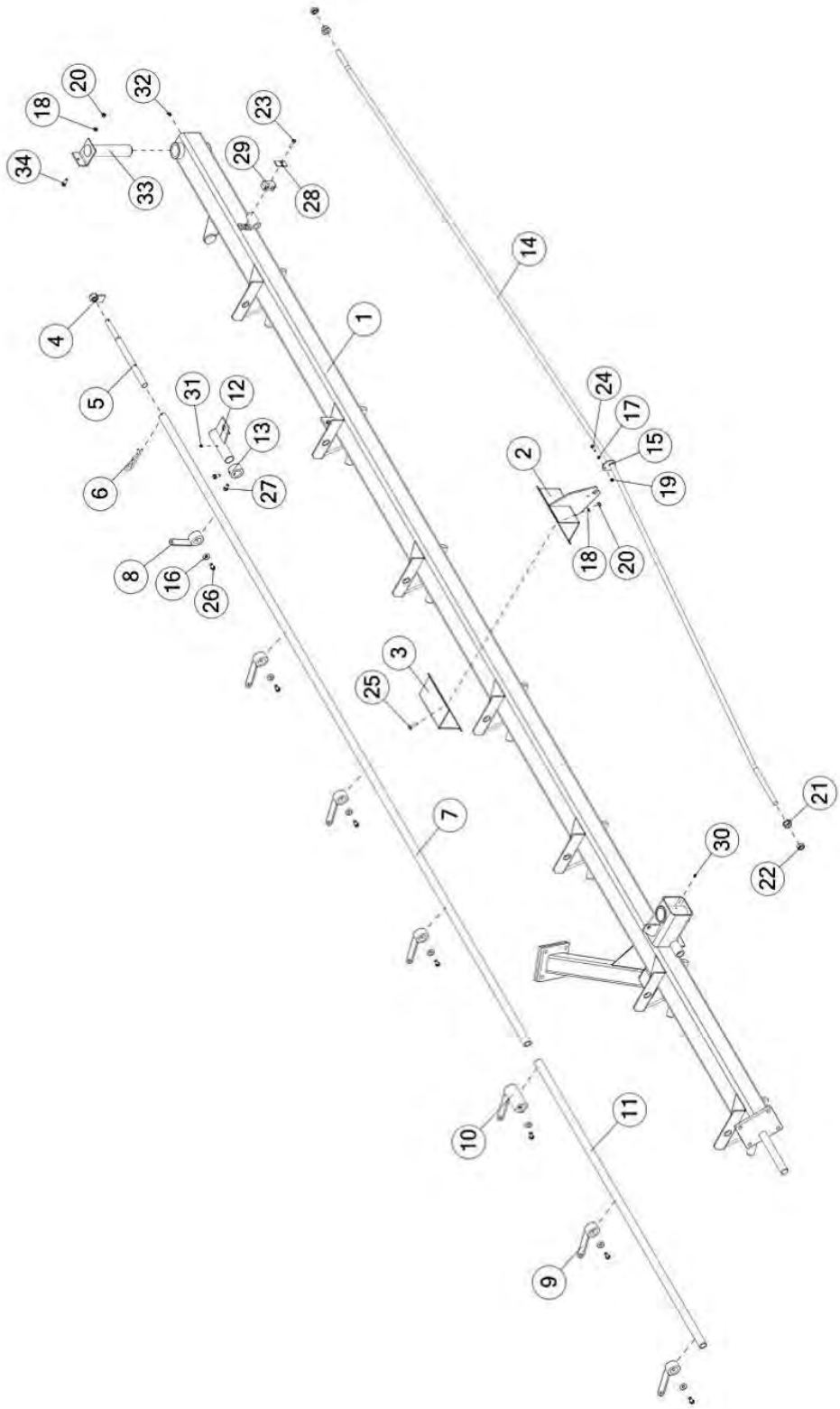

# FIGURE 8
# LH RAKE BEAM ASSEMBLY

| ITEM | QTY | PART # | DESCRIPTION |
|---|---|---|---|
| 1 | 1 | 67322 | ASSM, BEAM WITH DECALS, LH |
| 2 | 1 | 14DWE85 | ROD STANDOFF |
| 3 | 1 | 14D3G18 | ROD STAND-OFF BRACKET |
| 4 | 1 | BFR426 | ASSM, RAKE PRESSURE HANDLE |
| 5 | 1 | BFR486 | ASSM, RAKE ARM LOCK-UP SHAFT |
| 6 | 1 | YPHR08040 | HAIR PIN, 1/4" X 5" 2109 |
| 7 | 1 | BFR521 | LIFTING PIPE BACK |
| 8 | 1 | BFR430 | ASSM, SPRING BRACKET, RH |
| 9 | 4 | BFR431 | ASSM, SPRING BRACKET, LH |
| 10 | 1 | BFR750 | ASSM, LONG LIFT PIPE CONNECTOR, LH |
| 11 | 1 | BFR520 | FRONT LIFT PIPE |
| 12 | 1 | BFR530 | ASSM, HYDRAULIC CYLINDER END SLIDE, LH |
| 13 | 1 | BFR83 | PIPE CLAMP |
| 14 | 1 | BFR612 | SIDE ARM STABILIZER ROD |
| 15 | 1 | DF22 | RING FOR STRAP |
| 16 | 7 | YWFL14005 | WASHER, FLAT, 7/16 USS |
| 17 | 2 | YWLO08005 | WASHER, LOCK, 1/4 |
| 18 | 7 | YWLO12005 | WASHER, LOCK, 3/8 |
| 19 | 1 | YNHX08005 | HEX NUT, 1/4 |
| 20 | 7 | YNHX12005 | HEX NUT, 3/8-16 GR 2 |
| 21 | 2 | BFR618 | FLANGE NUT, NF, 3/4"-16 |
| 22 | 2 | YNJM24011 | HEX NUT, JAM, 3/4-16 |
| 23 | 1 | 56568 | CLAMP BOLT |
| 24 | 1 | YBHH08010 | BOLT, 1/4 X 1 GR 5 |
| 25 | 6 | YBHH12035 | BOLT, 3/8"-16 X 1-1/4" GR. 5 |
| 26 | 7 | YBHH14005 | BOLT, 7/16 X 1 GR 5 |
| 27 | 2 | YBHH14035 | BOLT, 7/16 X 3/4 GR 5 |
| 28 | 1 | 56563 | CLAMP TOP PLATE |
| 29 | 1 | 67354 | HOSE CLAMP, DOUBLE, 1/4" |
| 30 | 1 | G89 | ZERK, 1/4"-28 STRAIGHT |
| 31 | 1 | MS26 | 1/4" - 28, STRAIGHT STANDARD SHORT GREASE FITTING |
| 32 | 1 | RG21 | GREASE ZERK, 45 DEGREE |
| 33 | 1 | BFR756 | BEAM PIVOT SHAFT |
| 34 | 1 | YBHH12010 | BOLT, 3/8 X 1 GR 5 |

# FIGURE 9
# RAKE WHEEL ASSEMBLY

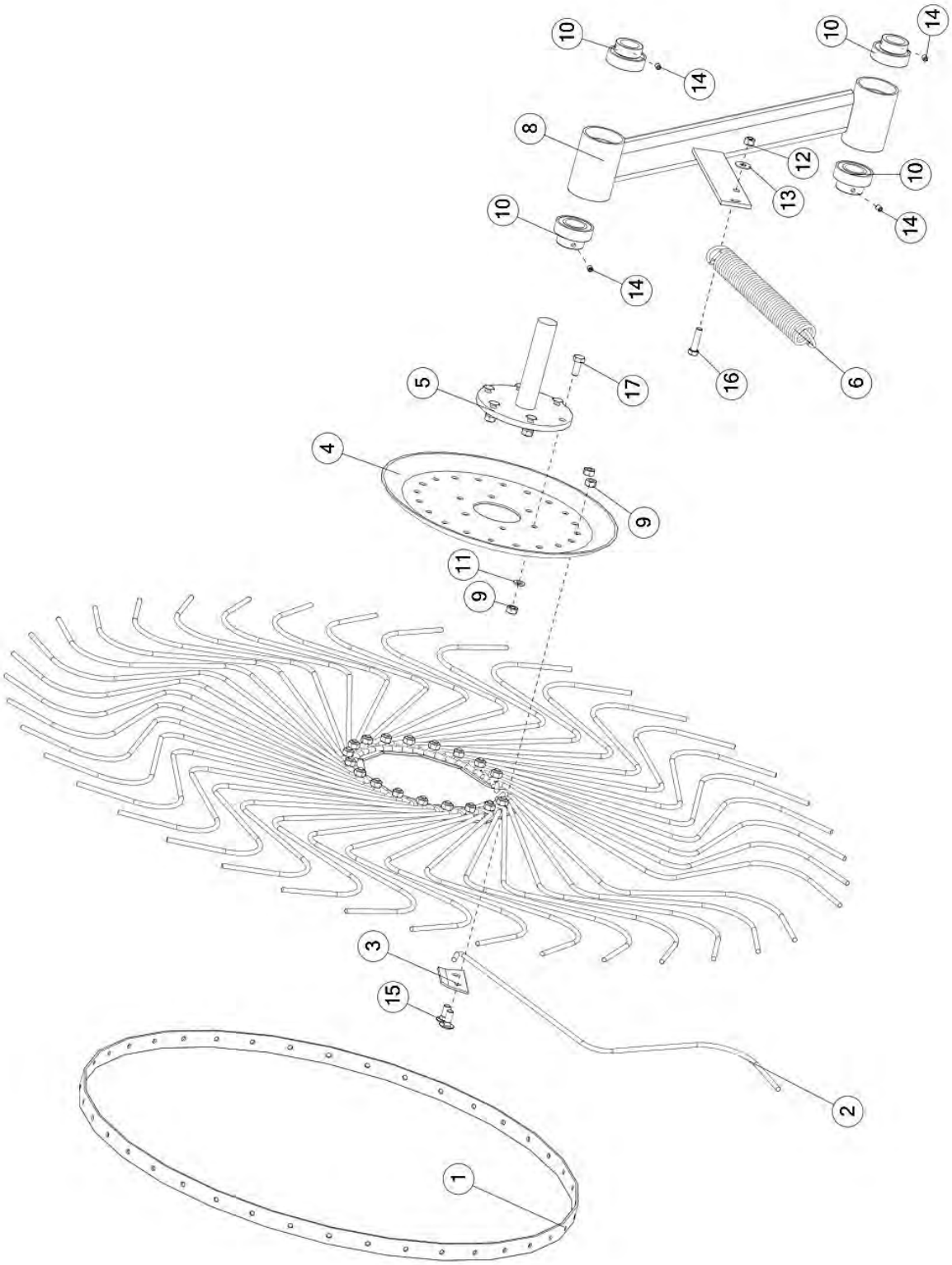

# FIGURE 9
# RAKE WHEEL ASSEMBLY

| ITEM | QTY | PART # | DESCRIPTION |
|---|---|---|---|
| 1 | 1 | T177 | RAKE WHEEL OUTER RING |
| 2 | 40 | T176 | RAKE WHEEL TOOTH |
| 3 | 10 | T178 | RAKE TOOTH CLIP |
| 4 | 1 | T179 | RAKE WHEEL CENTER |
| 5 | 1 | BFR657 | ASSM, RAKE WHEEL HUB |
| 6 | 1 | BFR138 | SPRING |
| 7 | 1 | BFR140 | RAKE ARM ADJUSTMENT CHAIN |
| 8 | 1 | BFR489 | ASSM, RAKE ARM LH |
| * | 1 | BFR490 | ASSM, RAKE ARM RH |
| 9 | 26 | YNHX76015 | HEX NUT, M10-1.5 |
| 10 | 4 | BFR525 | FLAT BEARING 1-1/4", W/ LOCK COLLAR ASSEMBLY |
| 11 | 2 | YWLO12005 | WASHER, LOCK, 3/8 |
| 12 | 1 | YNTL12005 | HEX NUT, TOP LOCK, 3/8-16 |
| 13 | 1 | YWFL12005 | WASHER, FLAT, 3/8 USS |
| 14 | 5 | YSKP10020 | SET SCREW, SOCKET, KNURLED CUP PT, 5/16-24 X 3/8 W/NYL PTCH |
| 15 | 20 | YBCR76005 | CARR. BOLT, 10MM X 25MM |
| 16 | 1 | YBHH12025 | BOLT, 3/8-16 X 1-1/2 GR 5 |
| 17 | 6 | YBHH12035 | BOLT, 3/8 X 1-1/4 GR 5 |
| 18 | 6 | YNHX12005 | HEX NUT, 3/8 - 16 GR 5 |

*** MEANS NOT SHOWN**

# FIGURE 10
# HUB & BRAKE ASSEMBLY

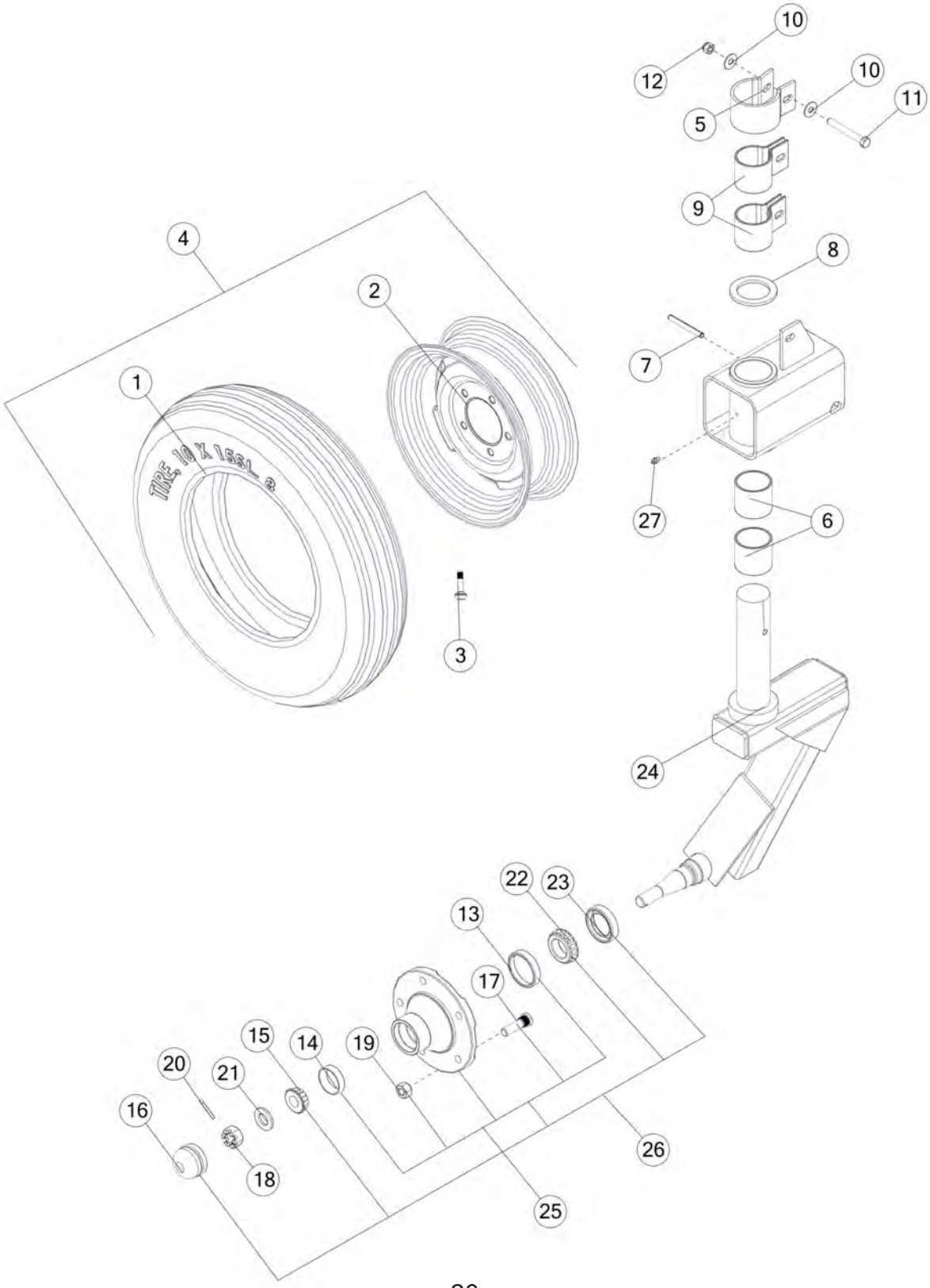

# FIGURE 10
# HUB & BRAKE ASSEMBLY

| ITEM | QTY | PART# | DESCRIPTION |
|---|---|---|---|
| 1 | 2 | BFR128 | TIRE 670 X 15 |
| 2 | 2 | BFR67 | WHEEL, 5" X 15" |
| 3 | 2 | 72436 | VALVE STEM, 1-1/2" RUBBER |
| 4 | 2 | 32006 | 6.70-15 TIRE ON 5" X 15" WHEEL |
| 5 | 2 | BFR311 | BRAKE COLLAR |
| 6 | 4 | RG26 | BUSHING, STEEL, 2.015" ID X 2.25" OD X 2.00" LONG |
| 7 | 2 | YPEX10025 | EXPANSION PIN, 5/16" X 2-3/4" |
| 8 | 1 | BFR309 | GAUGE WHEEL WASHER |
| 9 | 4 | BFR310 | BRAKE PAD |
| 10 | 4 | YWFL12005 | WASHER, FLAT, 3/8 USS |
| 11 | 2 | YBHH12125 | BOLT, HEX, FT, 3/8-16 X 3, G5, ZC |
| 12 | 2 | YNNY12005 | NUT, HEX, 3/8-16, LKNY, G2, ZC |
| 13 | 2 | BFR57 | SEAL |
| 14 | 2 | BFR61 | CUP |
| 15 | 2 | BFR62 | CONE BEARING # P752305 |
| 16 | 2 | BFR66 | HUB CAP |
| 17 | 10 | YBSD16005 | BOLT, STUD, 1/2-20UNF X 1-7/8 X 3/8, G5, ZC |
| 18 | 2 | YNSL24010 | NUT, SLOT, 3/4-16, NA, G2, NF |
| 19 | 10 | YNWL16005 | NUT, WHEEL, 1/2-20, NA, G5, ZC |
| 20 | 2 | YPCT05010 | COTTER PIN, 5/32 X 1-1/2 |
| 21 | 2 | YWFL24010 | WASHER, FLAT, SAE 3/4, PLAIN |
| 22 | 2 | 17G145 | TAPERED ROLLER BEARING, 1.249 BORE |
| 23 | 2 | 60699 | SEAL |
| 24 | 1 | BFR312 | ASSY, COMPLETE FORK RH |
| * | 1 | BFR316 | ASSY, COMPLETE FORK LH |
| 25 | 2 | BFR60 | HUB, WITH RACES AND STUDS |
| 26 | 2 | BFR75 | HUB ASSY, GROUND WHEEL |
| 27 | 2 | G89 | ZERK, 1/4"-28 STRAIGHT |

*** MEANS NOT SHOWN**

# FIGURE 11
# HYDRAULICS

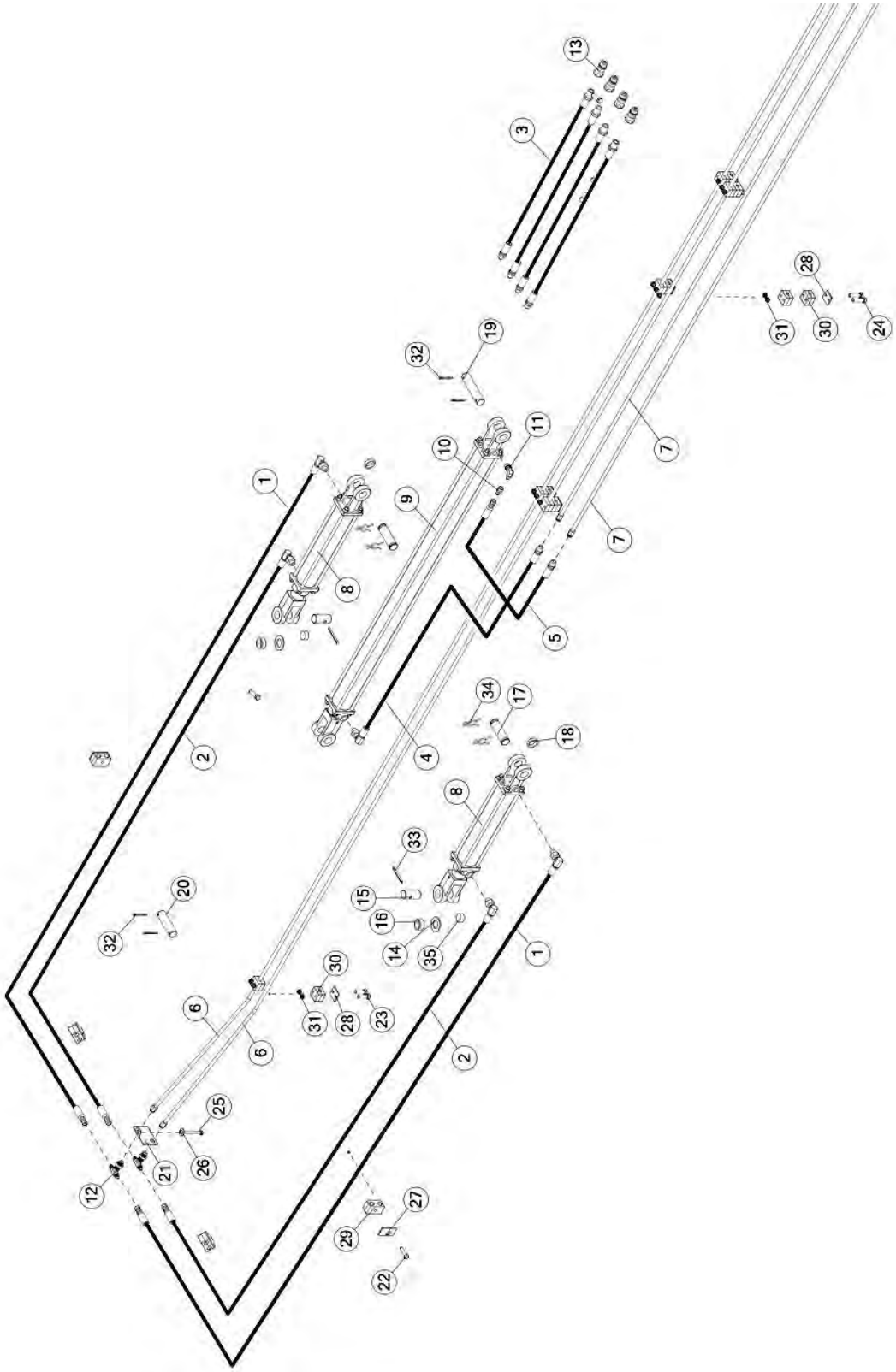

# FIGURE 11
# HYDRAULICS

| ITEM | QTY | PART # | DESCRIPTION |
|---|---|---|---|
| 1 | 2 | 67077 | HSASSM, HYD, 4 X 108, 6ORB, 4JIC |
| 2 | 2 | 67420 | HSASSM, HYD, 4 X 120, 6ORB, 4JIC |
| 3 | 4 | 70700 | HSASSM, HYD, 4 X 136, 4JIC, 8ORB |
| 4 | 1 | 70706 | HSASSM, HYD, 4 X 33, 4JIC, 6ORB |
| 5 | 1 | 70710 | HSASSM, HYD, 4 X 30, 4JIC, 4JIC SWIVEL |
| 6 | 2 | 71333 | TUBE, RND, HYD, 0.375" X 0.049" X 0.277" X 237.85" |
| 7 | 2 | 70613 | TUBE, RND, HYD, 0.25 X .13 X130 |
| 8 | 2 | 66933 | 2.0" X 10" HYDRAULIC CYLINDER |
| 9 | 1 | 66935 | 2.0" X 40" HYDRAULIC CYLINDER |
| 10 | 1 | 58108 | IN-LINE CONNECTOR, ORIFICE, 4-XHX7-S .031 |
| 11 | 1 | 71281 | MALE 37° / ORB |
| 12 | 2 | 71585 | BULKHEAD TEE FITTING, 04X04X06 |
| 13 | 4 | 67148 | FTG, ST, 8ORB, QUICK COUPLER TIP |
| 14 | 2 | 16SV136 | WASH, FLAT, 1.75 X 1.02 X 0.13, ZC |
| 15 | 2 | BFR517 | CYLINDER PIN BACK |
| 16 | 2 | K106 | SPACER |
| 17 | 2 | T143 | HYDRAULIC CYLINDER PIN |
| 18 | 2 | X94 | 1ST BEATER SPACER |
| 19 | 1 | BFR396 | CYLINDER PIN |
| 20 | 1 | BFR634 | CYLINDER PIN |
| 21 | 1 | 66939 | BRKT, MOUNT, HYD BULKHEAD T |
| 22 | 4 | 56568 | CLAMP BOLT |
| 23 | 4 | YBHH08045 | BOLT, 1/4 X 2 GR 5 |
| 24 | 12 | YBHH08085 | BOLT, 1/4 X 3 GR 5 |
| 25 | 1 | YBHH16010 | BOLT, 1/2 X 1 GR 5 |
| 26 | 1 | YWLO16005 | WASHER, LOCK, 1/2 |
| 27 | 4 | 56563 | CLAMP TOP PLATE |
| 28 | 8 | CHM273 | CLAMP TOP PLATE |
| 29 | 4 | 67354 | HOSE CLAMP, DOUBLE, 1/4" |
| 30 | 8 | CHM280 | HOSE CLAMP, 3/8" |
| 31 | 14 | YNFG08010 | HEX NUT, FLANGE, NYLOCK, 1/4-20, GR F, ZINC |
| 32 | 4 | YPCT05010 | COTTER PIN 5/32" X 1-1/2" |
| 33 | 2 | YPCT07005 | COTTER PIN, 7/32" X 2" |
| 34 | 4 | YPHR02020 | HAIR PIN, #23-10 |
| 35 | 2 | BFR506 | NYLON WEAR BLOCK |

# FIGURE 12
# HYDRAULIC LIFT CYLINDER

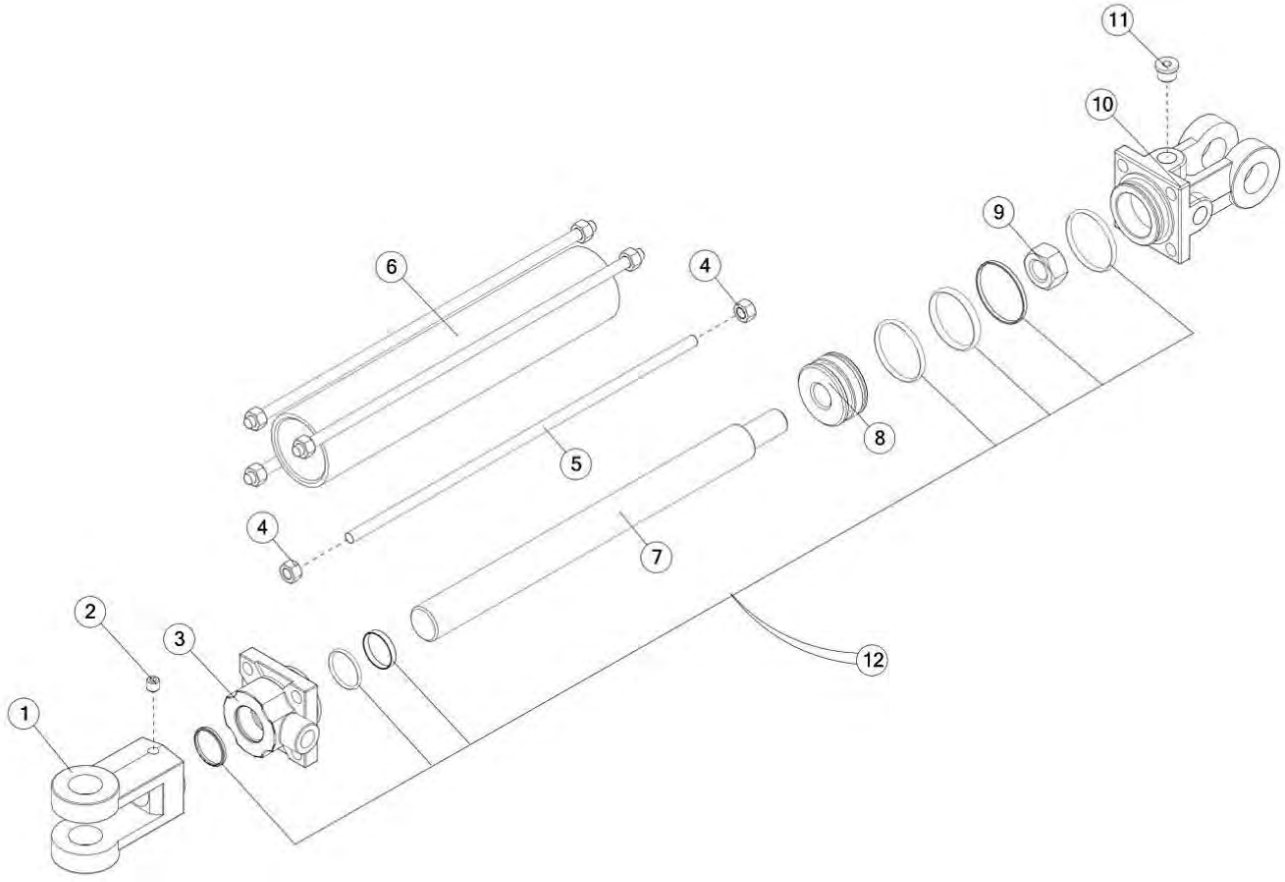

# FIGURE 12
# HYDRAULIC LIFT CYLINDER

| ITEM | QTY | PART # | DESCRIPTION |
|---|---|---|---|
| 1 | 1 | 23N150A | ROD CLEVIS |
| 2 | 1 | YSSO12015 | SET SCREW, SOCKET, 3/8-24 X 3/8 ROD CAP |
| 3 | 1 | 66934 | FOR 2" CYLINDERS |
| 4 | 8 | YNHX12006 | HEX NUT, 3/8-24 |
| 5 | 4 | 16SV170 | TIE ROD |
| 6 | 1 | 16SV169 | CYLINDER TUBE |
| 7 | 1 | 16SV168A | CYLINDER ROD FOR 2" X 10" CYLINDER |
| 8 | 1 | 56180 | PISTON FOR 2" CYLINDER |
| 9 | 1 | 23N148 | PISTON NUT |
| 10 | 1 | 66932 | CLEVIS CAP FOR 2" CYLINDER HOLLOW HEX |
| 11 | 1 | SD270 | PLUG 6 |
| 12 | 1 | 56187 | SEAL KIT FOR 2" CYLINDER |
| * | 1 | 66933 | 2.0" X 10" HYDRAULIC CYLINDER (3000 PSI) |

*** MEANS NOT SHOWN**

# FIGURE 13
# HYDRAULIC OPENING CYLINDER

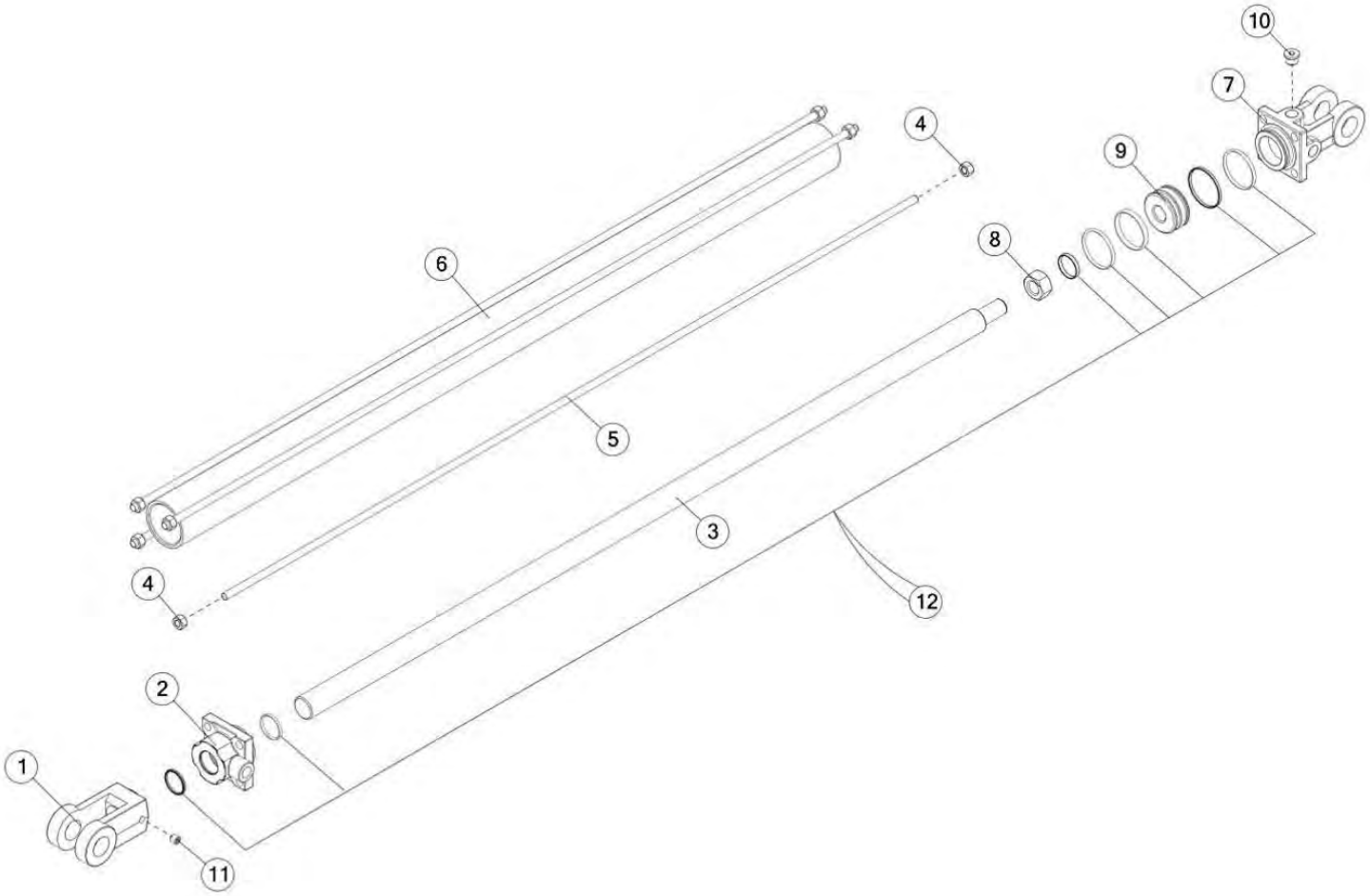

# FIGURE 13
# HYDRAULIC OPENING CYLINDER

| ITEM | QTY | PART # | DESCRIPTION |
|---|---|---|---|
| 1 | 1 | 23N150A | ROD CLEVIS |
| 2 | 1 | 56174 | ROD CAP FOR 2" CYLINDERS |
| 3 | 1 | BFR654 | ROD |
| 4 | 8 | YNHX10005 | HEX NUT, 5/16 GR 2 |
| 5 | 4 | BFR656 | TIE ROD |
| 6 | 1 | BFR655 | CYLINDER TUBE |
| 7 | 1 | 23N142A | CLEVIS CAP FOR 2" CYLINDER |
| 8 | 1 | 23N148 | PISTON NUT |
| 9 | 1 | 56180 | PISTON FOR 2" CYLINDER |
| 10 | 1 | SD270 | HOLLOW HEX PLUG 6 |
| 11 | 1 | YSSO12015 | SET SCREW, SOCKET, 3/8-24 X 3/8 |
| 12 | 1 | 56187 | SEAL KIT FOR 2" CYLINDER |
| * | 1 | 66935 | 2.0" X 40" HYDRAULIC CYLINDER (3000 PSI) |

*** MEANS NOT SHOWN**

# FIGURE 14
# OPTIONAL 15" GAUGE WHEEL

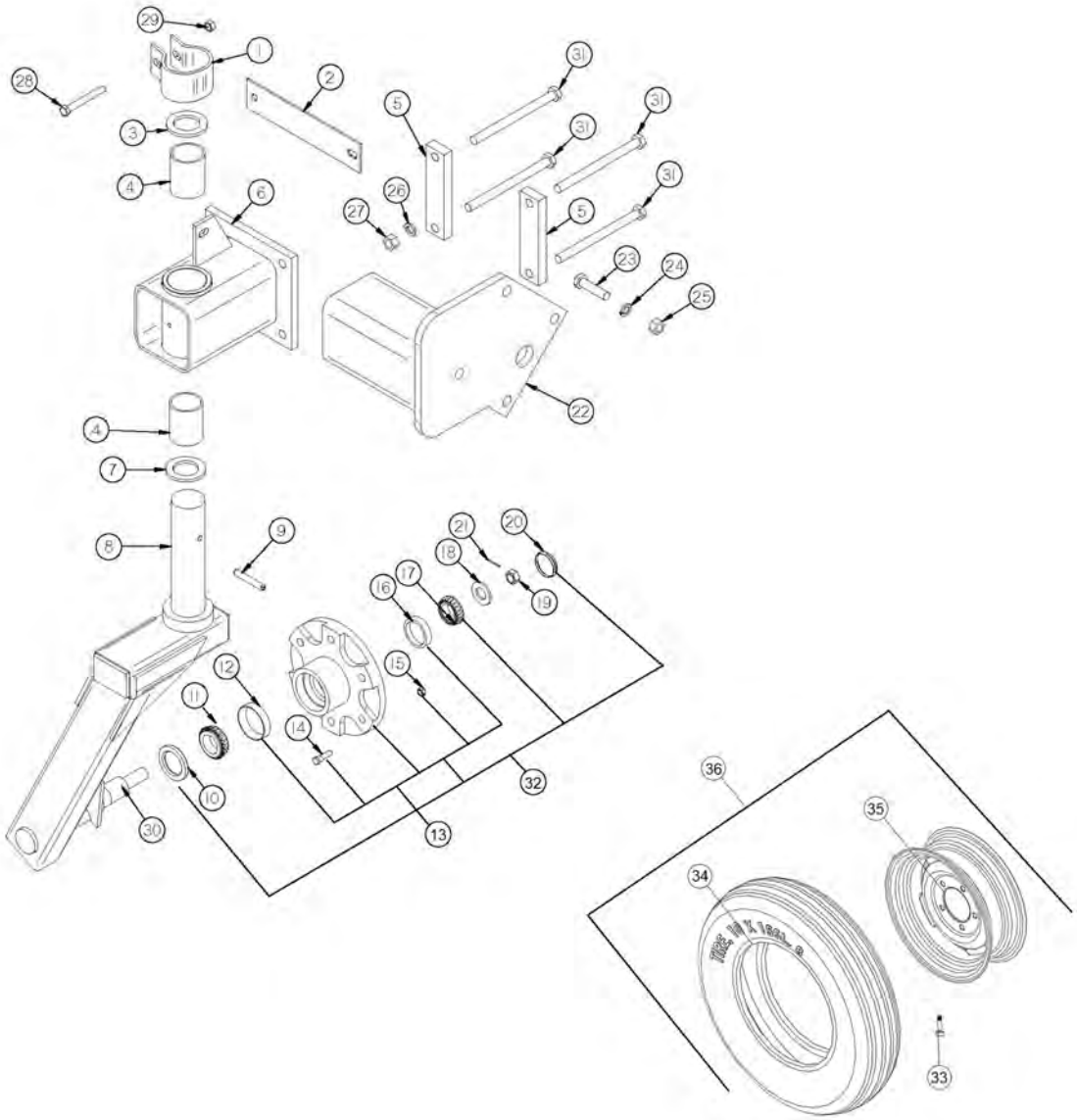

# FIGURE 14
# OPTIONAL 15" GAUGE WHEEL

| ITEM | QTY | PART # | DESCRIPTION |
|---|---|---|---|
| 1 | 1 | BFR311 | BRAKE COLLAR |
| 2 | 1 | BFR310 | BRAKE PAD |
| 3 | 1 | BFR309 | GAUGE WHEEL WASHER |
| 4 | 2 | RG26 | BUSHING, STEEL, 2.015" ID X 2.25" OD X 2.00" LONG |
| 5 | 2 | BFR725 | MOUNTING STRAP |
| 6 | 1 | BFR643 | GAUGE WHEEL MOUNT |
| 7 | 1 | RG24 | BRONZE WASHER |
| 8 | 1 | BFR316 | COMPLETE FORK, LH |
| * | 1 | BFR312 | COMPLETE FORK, RH |
| 9 | 1 | YPEX10025 | EXPANSION PIN, 5/16" X 2-3/4" |
| 10 | 1 | 60699 | SEAL |
| 11 | 1 | BFR58 | INNER BEARING |
| 12 | 1 | BFR59 | INNER RACE |
| 13 | 1 | BFR60 | HUB |
| 14 | 6 | YBSD16005 | STUD BOLT, 1/2"-20 UNF X 1-7/8" (3/8" SHOULDER) |
| 15 | 6 | YNWL16005 | WHEEL NUT, 1/2"-20 UNF |
| 16 | 1 | BFR61 | OUTER RACE |
| 17 | 1 | BFR62 | OUTER BEARING |
| 18 | 1 | YWFL24010 | WASHER, FLAT, 3/4" USS |
| 19 | 1 | YNSL24010 | HEX NUT, SLOTTED, 3/4"-16 |
| 20 | 1 | BFR66 | HUB CAP |
| 21 | 1 | YPCT05010 | COTTER PIN, 5/32" X 1-1/2" |
| 22 | 1 | BFR644 | GAUGE WHEEL EXTENSION, LH |
| * | 1 | BFR645 | GAUGE WHEEL EXTENSION, RH |
| 23 | 1 | YBHH20025 | BOLT, 5/8" X 2" GR. 5 |
| 24 | 4 | YWLO20005 | WASHER, LOCK, 5/8" |
| 25 | 4 | YNHX20005 | HEX NUT, 5/8"-11 PLATED |
| 26 | 4 | YWLO16005 | WASHER, LOCK, 1/2" |
| 27 | 4 | YNHX16005 | HEX NUT, 1/2" |
| 28 | 4 | YBHH12115 | BOLT, HEX, FT, 3/8-16 X 3, G2, ZC |
| 29 | 1 | YNHX12005 | HEX NUT, 3/8"-16 |
| 30 | 1 | BFR56 | SPINDLE |
| 31 | 1 | YBHH16175 | BOLT, 1/2" X 6-1/2" GR. 5 |
| 32 | 1 | BFR75 | COMPLETE HUB |
| 33 | 1 | 72436 | VALVE STEM, 1-1/2" RUBBER |
| 34 | 1 | BFR128 | TIRE 670 X 15 |
| 35 | 1 | BFR67 | WHEEL, 5" X 15" |
| 36 | 1 | 32006 | 6.70-15 TIRE ON 5" X 15" WHEEL |

*** MEANS NOT SHOWN**

# FIGURE 15
# OPTIONAL 2 WHEEL EXTENSION

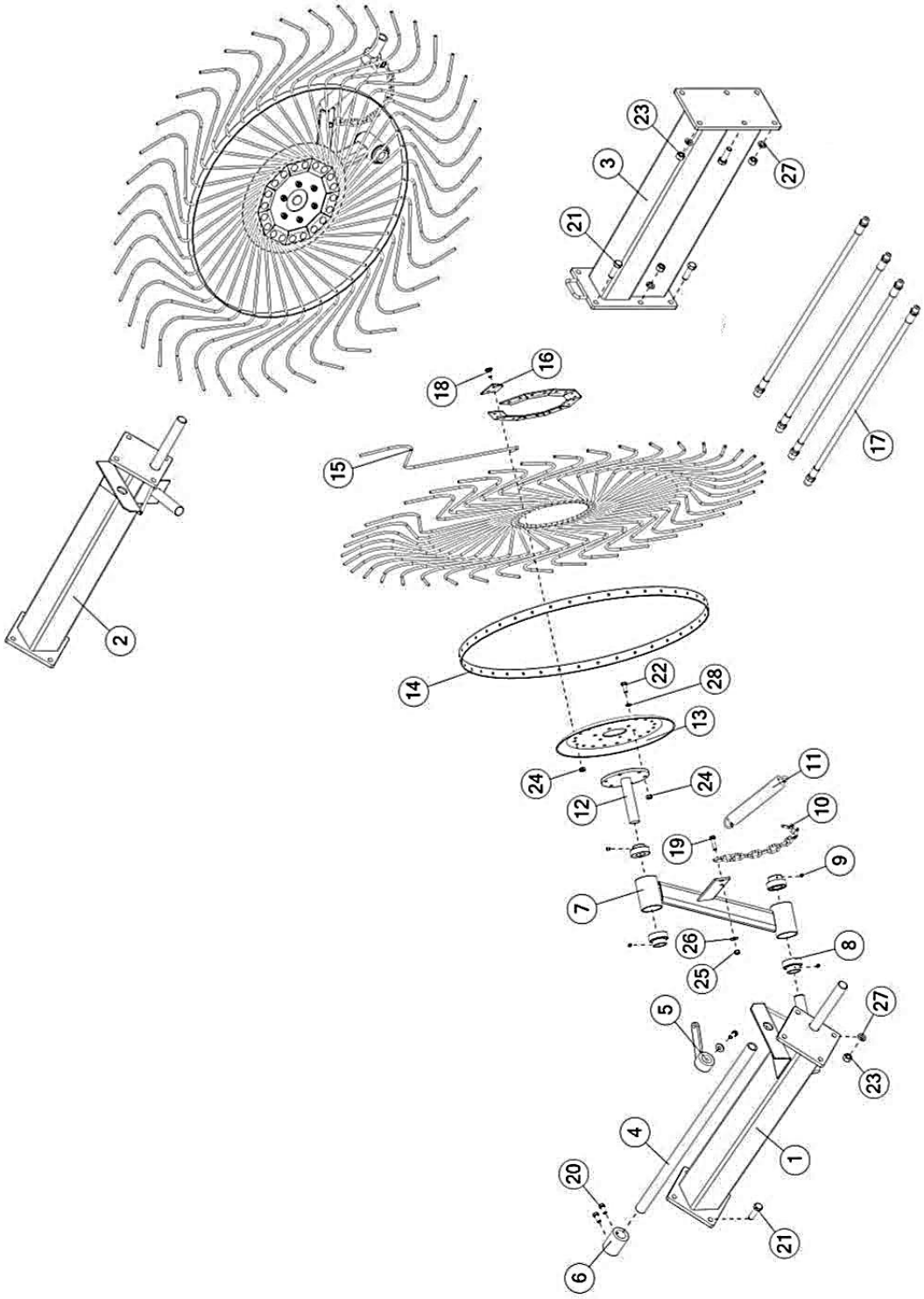

# FIGURE 15
# OPTIONAL 2 WHEEL EXTENSION

| ITEM | QTY | PART # | DESCRIPTION |
|---|---|---|---|
| 1 | 1 | BFR733 | RAKE BEAM EXTENSION, RH |
| 2 | 1 | BFR734 | RAKE BEAM EXTENSION, LH |
| 3 | 1 | 67429 | POLE EXTENSION |
| 4 | 2 | BFR536 | LIFTING PIPE CONNECTOR |
| 5 | 1 | BFR431 | SPRING CLAMP, LH |
| * | 1 | BFR430 | SPRING CLAMP, RH |
| 6 | 2 | BFR537 | LIFTING PIPE CONNECTOR |
| 7 | 1 | BFR490 | ASSM, RAKE ARM RH |
| * | 1 | BFR489 | ASSM, RAKE ARM LH |
| 8 | 8 | BFR525 | FLAT BEARING 1-1/4", W/ LOCK COLLAR ASSEMBLY |
| 9 | 8 | YSKP10020 | SET SCREW, SOCKET, |
| 10 | 2 | BFR140 | RAKE ARM ADJUSTMENT CHAIN |
| 11 | 2 | BFR138 | SPRING |
| 12 | 2 | BFR657 | ASSM, RAKE WHEEL HUB |
| 13 | 2 | T179 | RAKE WHEEL CENTER |
| 14 | 2 | T177 | RAKE WHEEL OUTER RING |
| 15 | 80 | T176 | RAKE WHEEL TOOTH |
| 16 | 20 | T178 | RAKE TOOTH CLIP |
| 17 | 4 | 72142 | HYD HOSE ASSY, 4 X 33, 6 JIC, 6 JIC |
| 18 | 40 | YBCR76005 | CARR. BOLT, 10MM X 25MM |
| 19 | 2 | YBHH12025 | BOLT, 3/8-16 X 1-1/2 GR 5 |
| 20 | 4 | YBHH14005 | BOLT, 7/16 X 1 GR 5 |
| 21 | 28 | YBHH20025 | BOLT, 5/8 X 2 GR 5 |
| 22 | 12 | YBHH12035 | BOLT, 3/8 X 1-1/4 GR5 |
| 23 | 28 | YNHX20010 | HEX NUT, 5/8-18 GR 8 |
| 24 | 40 | YNHX76015 | HEX NUT, M10-1.5 |
| 25 | 2 | YNTL12005 | HEX NUT, TOP LOCK, 3/8-16 |
| 26 | 2 | YWFL12005 | WASHER, FLAT, 3/8 USS |
| 27 | 28 | YWLO20005 | WASHER, LOCK, 5/8 |
| 28 | 12 | YWLO12005 | WASHER, LOCK, 3/8 |
| * | 4 | YWLO76015 | HS ASSM, HYD, 4X33, 6JIC, 6JIC |

*** MEANS NOT SHOWN**

# FIGURE 16
# OPTIONAL 2 WHEEL CENTER KICKER WHEEL

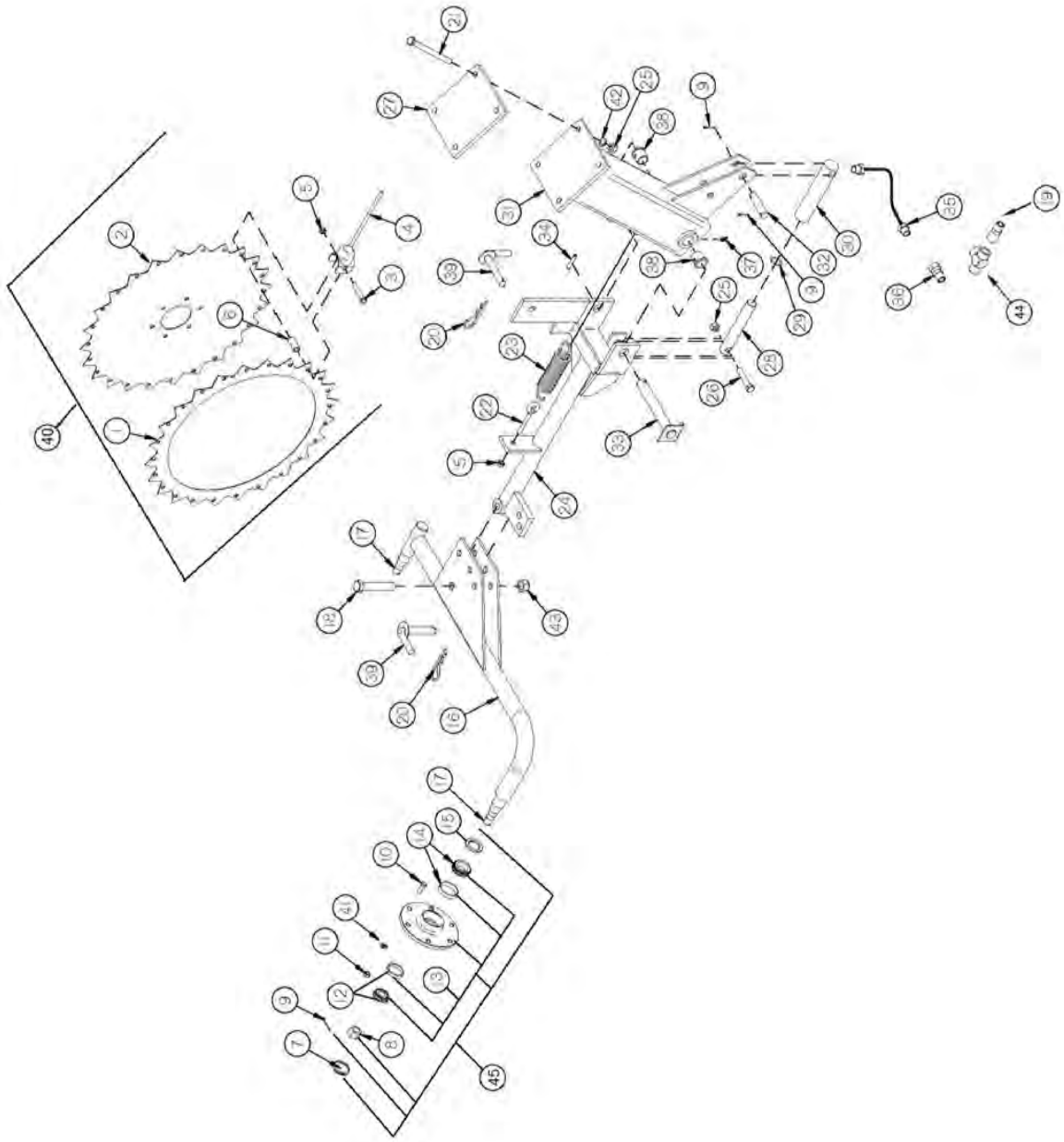

# FIGURE 16

# OPTIONAL 2 WHEEL CENTER KICKER WHEEL

| ITEM | QTY | PART # | DESCRIPTION |
|---|---|---|---|
| 1 | 1 | BFR369 | RAKE WHEEL RING |
| 2 | 1 | BFR370 | RAKE WHEEL CENTER |
| 3 | 24 | YBHH12100 | BOLT, HEX, 3/8-16 X 2-1/4, G5, ZC |
| 4 | 24 | T82 | RAKE WHEEL TOOTH |
| 5 | 24 | YNTL12005 | HEX NUT, TOP LOCK, 3/8"-16 |
| 6 | 24 | BFR371 | RAKE WHEEL SPACER |
| 7 | 2 | T173 | HUB CAP |
| 8 | 2 | YNSL24010 | HEX NUT, SLOTTED, 3/4"-16 |
| 9 | 3 | YPCT05010 | COTTER PIN, 5/32" X 1-1/2" |
| 10 | 12 | YBHH76005 | BOLT, 10MM X 25MM |
| 11 | 12 | YNHX76015 | HEX NUT, 10MM |
| 12 | 2 | 600014 | OUTER BEARING RACE |
| 13 | 2 | BFR32 | RAKE WHEEL HUB |
| 14 | 2 | 600012 | INNER BEARING RACE |
| 15 | 2 | T163 | SEAL |
| 16 | 1 | BFR511 | CENTER KICKER WHEEL ARM |
| 17 | 2 | BFR36 | SPINDLE |
| 18 | 1 | YBHH24050 | BOLT, 3/4" X 3" GR. 5 |
| 19 | 1 | 67148 | FTG, ST, 8ORB, QUICK COUPLER TIP |
| 20 | 2 | YPHR02010 | HAIR PIN, #21-07 |
| 21 | 4 | YBHH16175 | BOLT, 1/2" X 6-1/2" GR. 5 |
| 22 | 1 | YBTE12025 | TURNED EYE BOLT, 3/8" X 3" FULL THREAD |
| 23 | 1 | BR62 | SPRING |
| 24 | 1 | BFR512 | CENTER KICKER WHEEL PIVOT |
| 25 | 5 | YNTL16005 | HEX NUT, TOP LOCK, 1/2"-13 |
| 26 | 1 | YBHH16080 | BOLT, 1/2" X 2-1/2" GR. 5 |
| 27 | 1 | BFR513 | KICKER WHEEL MOUNT |
| 28 | 1 | BFR114 | PISTON |
| 29 | 1 | BFR115 | O-RING |
| 30 | 1 | BFR116 | HYDRAULIC CYLINDER |
| 31 | 1 | BFR514 | KICKER WHEEL OFFSET |
| 32 | 1 | BFR515 | CYLINDER PIN |
| 33 | 1 | BFR379 | AXLE SHAFT |
| 34 | 1 | YPEX10015 | EXPANSION PIN, 5/16" X 1-3/4" |
| 35 | 1 | BFR121 | HOSE |
| 36 | 1 | BFR122 | 3/8" MALE ADAPTER UNION |
| 37 | 1 | RG21 | GREASE ZERK, 45 DEGREE |
| 38 | 2 | BFR27 | BUSHING |
| 39 | 2 | BFR197 | LOCKING PIN |
| 40 | 1 | BFR748 | COMPLETE WHEEL ASSEMBLY |
| 41 | 12 | YWLO76015 | WASHER, LOCK, M10 |
| 42 | 4 | YWLO12005 | WASHER, LOCK, 3/8" |
| 43 | 1 | YNTL24005 | WASHER, LOCK, 1/2" |
| 44 | 1 | 70212 | FTG, T, 3/4-16 ORB, 3/4-16 ORB, STL |
| 45 | 1 | BFR76 | COMPLETE HUB |

# FIGURE 17
# OPTIONAL 3 WHEEL CENTER KICKER WHEEL

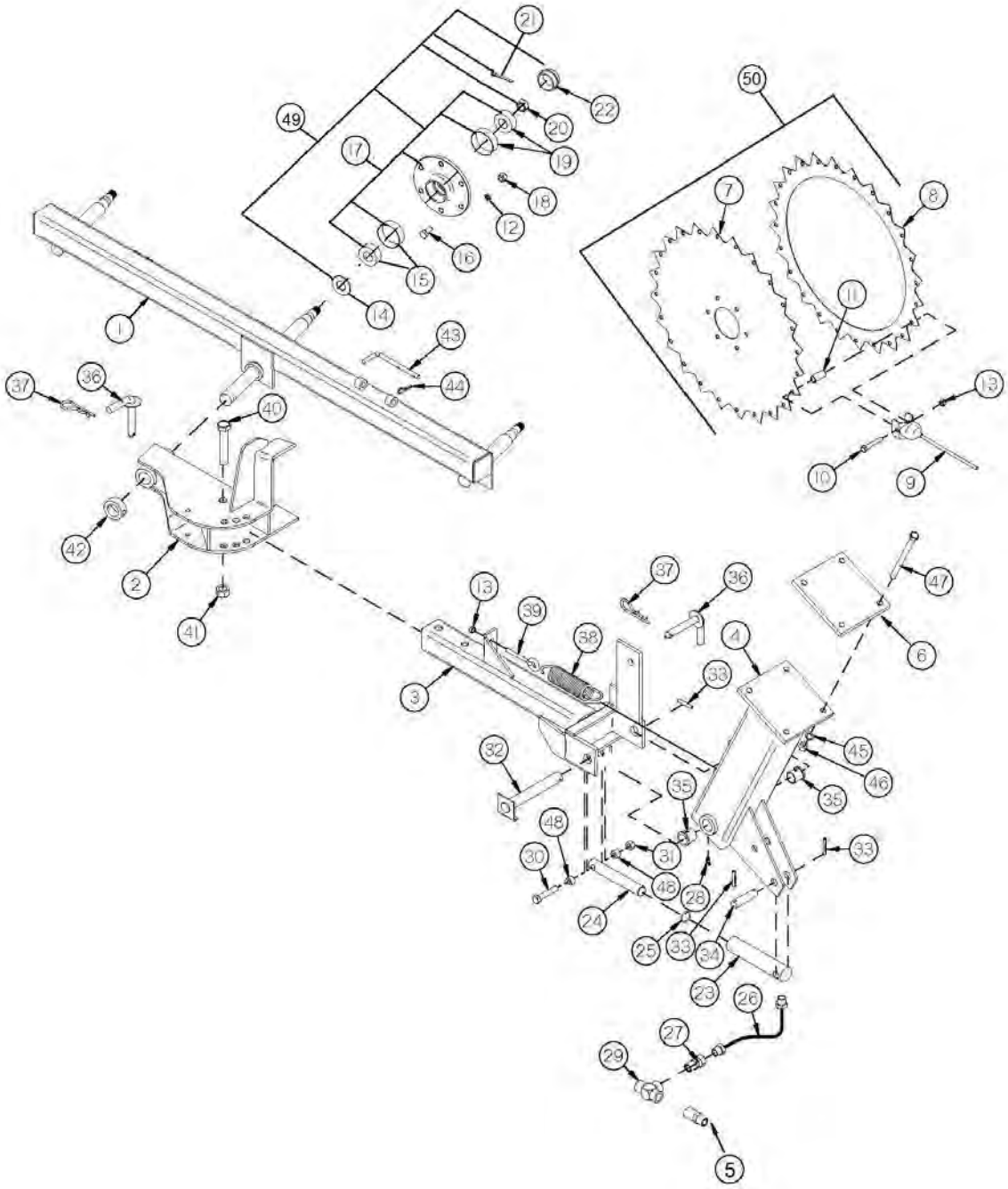

# FIGURE 17

# OPTIONAL 3 WHEEL CENTER KICKER WHEEL

| ITEM | QTY | PART # | DESCRIPTION |
|---|---|---|---|
| 1 | 1 | BFR717 | KICKER RAKE BEAM |
| 2 | 1 | BFR718 | PIVOT |
| 3 | 1 | BFR719 | SQUARE RAKE ARM |
| 4 | 1 | BFR514 | KICKER WHEEL OFFSET |
| 5 | 1 | 67148 | FTG, ST, 8ORB, QUICK COUPLER TIP |
| 6 | 1 | BFR513 | KICKER WHEEL MOUNT |
| 7 | 1 | BFR370 | RAKE WHEEL CENTER |
| 8 | 1 | BFR369 | RAKE WHEEL RING |
| 9 | 24 | T82 | RAKE WHEEL TOOTH |
| 10 | 24 | YBHH12100 | BOLT, 3/8" X 2-1/4" GR. 5 |
| 11 | 24 | BFR371 | RAKE WHEEL SPACER |
| 12 | 18 | YWLO76015 | WASHER, LOCK, M10 |
| 13 | 25 | YNTL12005 | HEX NUT, TOP LOCK, 3/8"-16 |
| 14 | 3 | T163 | SEAL |
| 15 | 3 | 600012 | INNER BEARING RACE |
| 16 | 36 | YBHH76005 | BOLT, 10MM X 25MM |
| 17 | 3 | BFR32 | RAKE WHEEL HUB |
| 18 | 36 | YNHX76015 | HEX NUT, 10MM |
| 19 | 3 | 600014 | OUTER BEARING RACE |
| 20 | 3 | YNSL24010 | HEX NUT, SLOTTED, 3/4"-16 |
| 21 | 3 | YPCT05010 | COTTER PIN, 5/32" X 1-1/2" |
| 22 | 3 | T173 | HUB CAP |
| 23 | 1 | BFR116 | HYDRAULIC CYLINDER |
| 24 | 1 | BFR114 | PISTON |
| 25 | 1 | BFR115 | O-RING |

# FIGURE 17
# OPTIONAL 3 WHEEL CENTER KICKER WHEEL

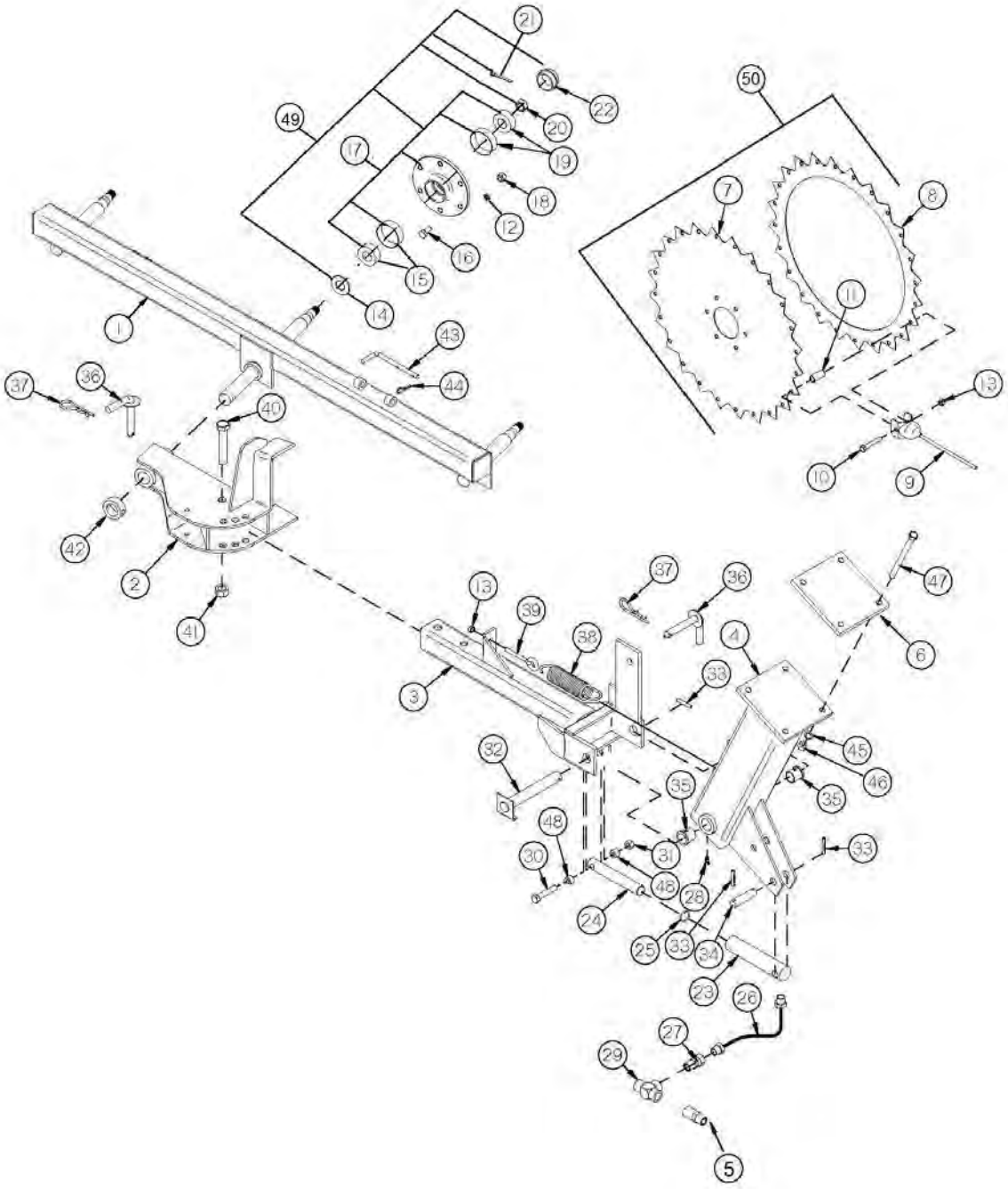

# FIGURE 17
# OPTIONAL 3 WHEEL CENTER KICKER WHEEL

| ITEM | QTY | PART # | DESCRIPTION |
|---|---|---|---|
| 26 | 1 | BFR121 | HOSE |
| 27 | 1 | BFR122 | 3/8" MALE ADAPTER UNION |
| 28 | 1 | RG21 | GREASE ZERK, 45 DEGREE |
| 29 | 1 | 70212 | FTG, T, 3/4-16 ORB, 3/4-16 ORB, STL |
| 30 | 1 | YBHH16115 | BOLT, 1/2" X 3-1/2" GR. 5 |
| 31 | 1 | YNTL16005 | HEX NUT, TOP LOCK, 1/2"-13 |
| 32 | 3 | BFR379 | AXLE SHAFT |
| 33 | 1 | YPEX10015 | EXPANSION PIN, 5/16" X 1-3/4" |
| 34 | 2 | BFR515 | CYLINDER PIN |
| 35 | 2 | BFR27 | BUSHING |
| 36 | 2 | BFR197 | LOCKING PIN |
| 37 | 1 | YPHR02010 | HAIR PIN, #21-07 |
| 38 | 1 | BR62 | SPRING |
| 39 | 1 | YBTE12025 | TURNED EYE BOLT, 3/8" X 3" FULL THREAD |
| 40 | 1 | YBHH24070 | BOLT, 3/4-10" X 4" GR. 5 |
| 41 | 1 | YNTL24005 | HEX NUT, TOP LOCK, 3/4"-10 |
| 42 | 1 | BFR720 | PIVOT LOCK COLLAR |
| 43 | 1 | BFR721 | BEAM LOCK PIN |
| 44 | 4 | YPHR02005 | HAIR PIN, #21-05 (1-7/8" LONG, 3/8-7/16" |
| 45 | 4 | YWLO16005 | SHAFT) WASHER, LOCK, 1/2" |
| 46 | 4 | YNTL16005 | HEX NUT, TOP LOCK, 1/2"-13 |
| 47 | 2 | YBHH16175 | BOLT, 1/2" X 6-1/2" GR. 5 |
| 48 | 1 | BFR722 | LIFT CYLINDER SPACER |
| 49 | 1 | BFR76 | RAKE WHEEL HUB WITH BEARINGS |
| 50 | 1 | BFR748 | COMPLETE WHEEL FOR 12 & 14 |

# FIGURE 18
# OPTIONAL WIND GUARD

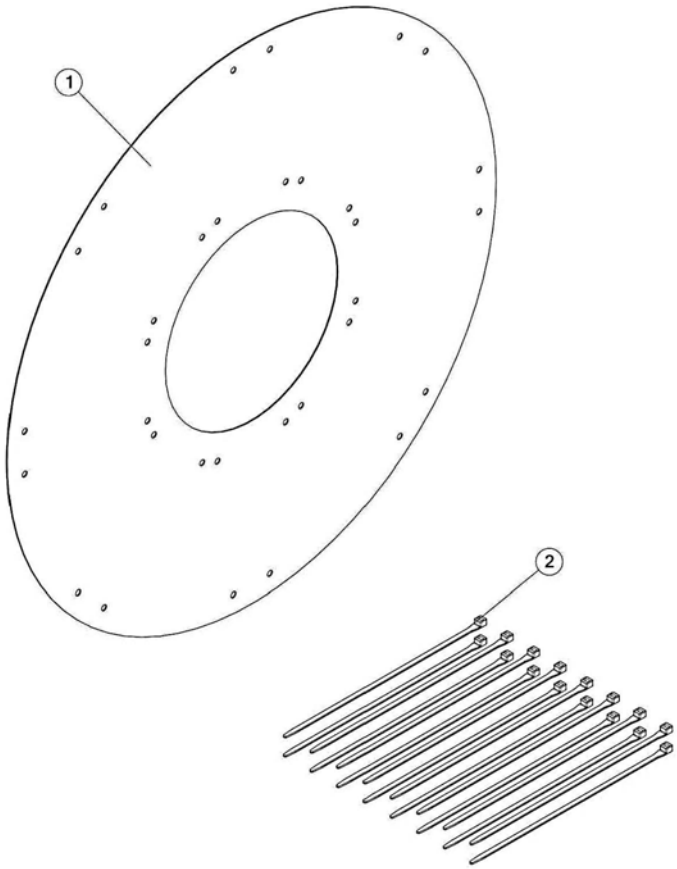

# FIGURE 18
# OPTIONAL WIND GUARD

| ITEM | QTY | PART # | DESCRIPTION |
|---|---|---|---|
| 1 | 1 | 59040 | POLY WIND GUARD, FOR 55" RAKE WHEEL |
| 2 | 16 | 57626 | 15 INCH 120# BLACK CABLE TIE |

# FIGURE 19
# OPTIONAL RAKE LIGHTS

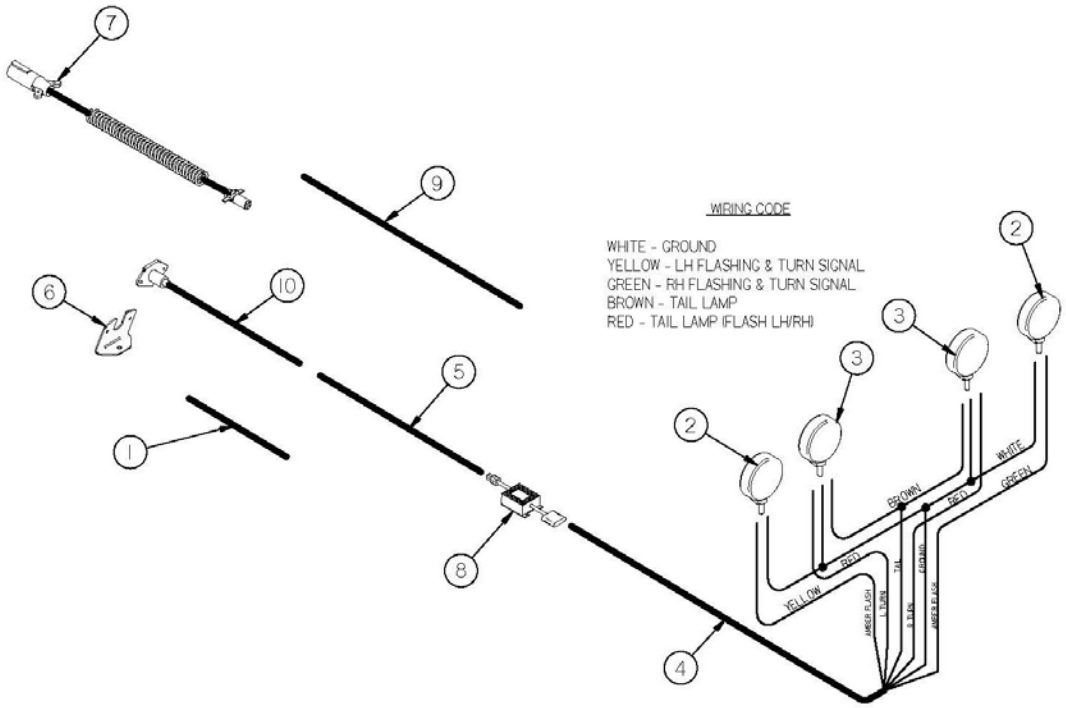

# FIGURE 19
# OPTIONAL RAKE LIGHTS

| ITEM | QTY | PART # | DESCRIPTION |
|---|---|---|---|
| 1 | 1 | BFR666 | 16 WHEEL EXT. LIGHT HARNESS |
| 2 | 2 | DWM129 | AMBER LIGHT |
| 3 | 2 | BFR675 | RED LIGHT |
| 4 | 1 | BFR667 | LIGHT HARNESS (6 WIRE) |
| 5 | 1 | BFR705 | 14 WHEEL LIGHT HARNESS |
| 6 | 1 | BFR659 | MOUNTING BRACKET |
| 7 | 1 | TLPC | TRANSPORT LIGHT CORD |
| 8 | 1 | 69908 | MODULE, CONTROL, BLINKER |
| 9 | 1 | BFR668 | 12 WHEEL LIGHT HARNESS |
| 10 | 1 | BFR706 | FRONT PIGTAIL |
| * | 1 | BFR707 | 14 WHEEL COMP. LIGHT HARNESS LESS OPTIONAL CORD |

*** MEANS NOT SHOWN**

# FIGURE 20
# TIRE & WHEEL OPTIONAL

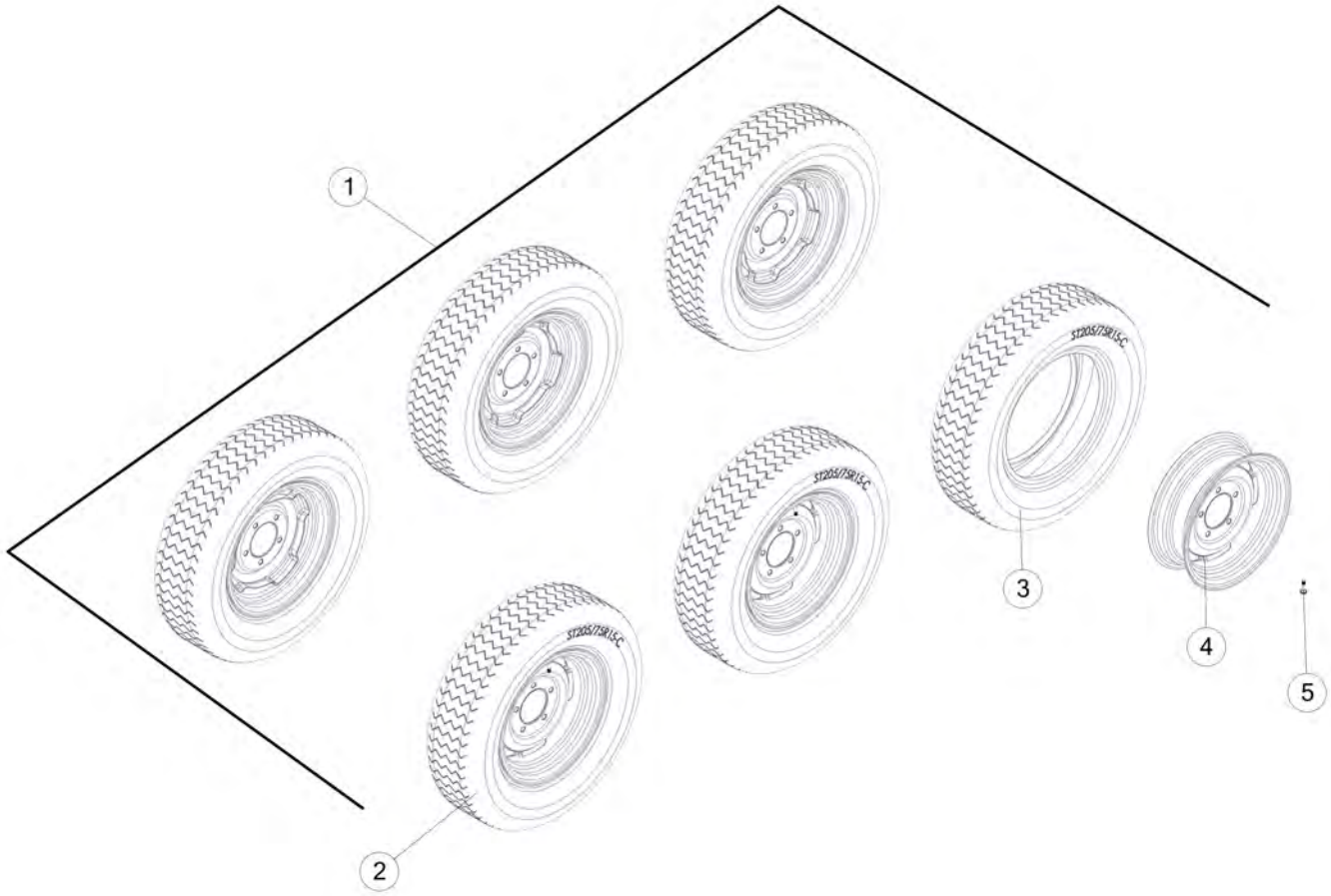

# FIGURE 20
# TIRE & WHEEL OPTIONAL

| ITEM | QTY | PART # | DESCRIPTION |
|---|---|---|---|
| 1 | 6 | TWP205R6 | (6) ST205/75R15-C TIRE OPTION |
| 2 | 6 | 75697 | 205/75R15 TIRE ON AG WHEEL |
| 3 | 6 | 75696 | ST205/75R15-C RADIAL TIRE |
| 4 | 6 | BFR67 | WHEEL 5" X 15" 5 BOLT CREAM COLOR |
| 5 | 6 | 72436 | VALVE STEM, 1-1/2" RUBBER |

# FIGURE 21
# WRAP AROUND OPTIONAL

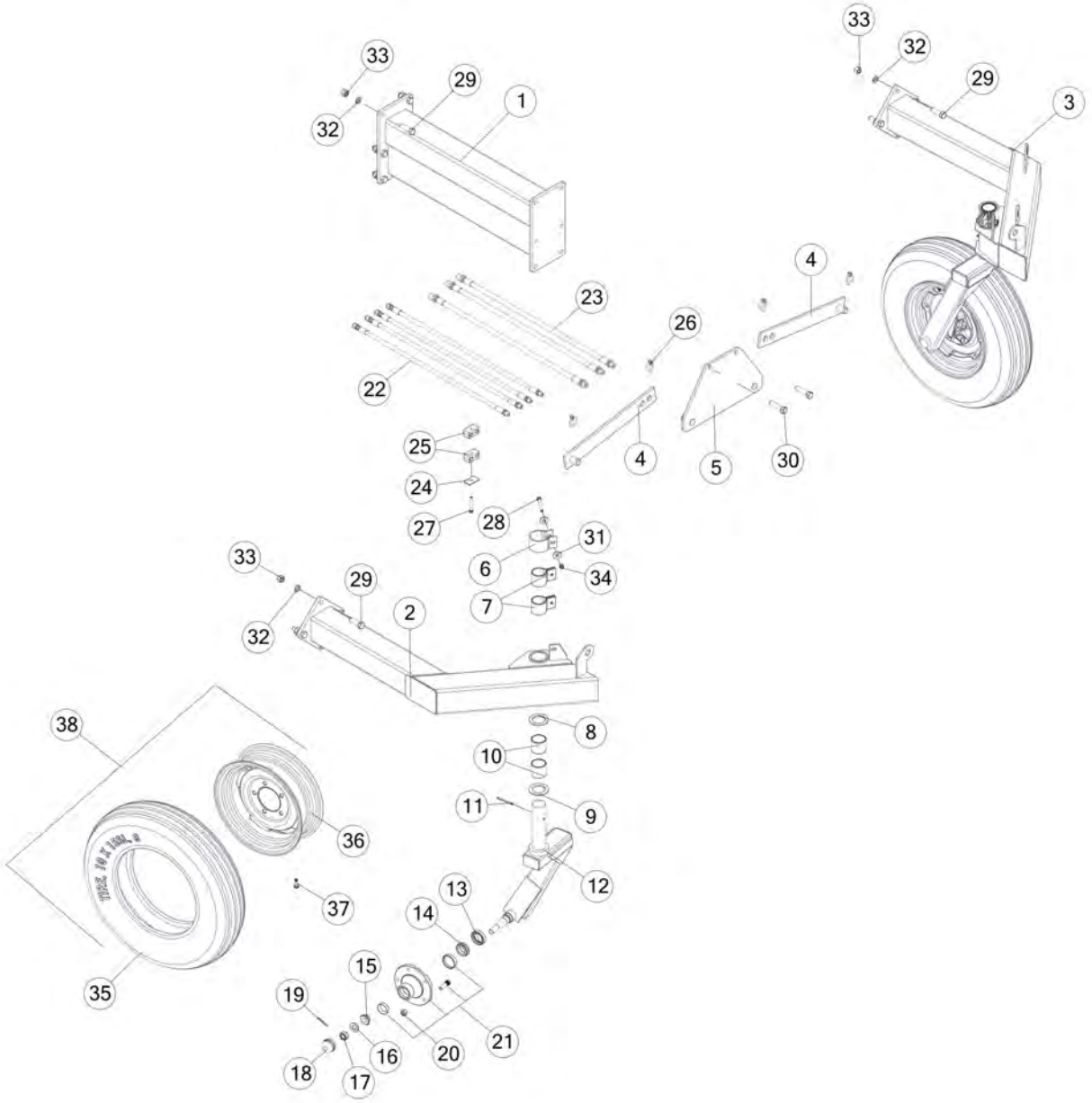

# FIGURE 21
# WRAP AROUND KIT OPTIONAL

| ITEM | QTY | PART # | DESCRIPTION |
|---|---|---|---|
| 1 | 1 | 67429 | POLE EXTENSION |
| 2 | 1 | BFR726 | ASSY, RIGHT EXTENSION |
| 3 | 1 | BFR727 | ASSY, LEFT EXTENSION |
| 4 | 2 | BFR597 | ASSY, SAFETY BAR |
| 5 | 1 | BFR731 | ASSY, TRANSPORT MOUNT |
| 6 | 2 | BFR311 | BRAKE COLLAR |
| 7 | 4 | BFR310 | BRAKE PAD |
| 8 | 2 | BFR309 | GAUGE WHEEL WASHER |
| 9 | 2 | RG24 | WASHER, THRUST, BRONZE, 2.00" ID X 3.00 OD X .125" LONG |
| 10 | 4 | RG26 | BUSHING, STEEL, 2.015" ID X 2.25" OD X 2.00" LONG |
| 11 | 2 | YPEX10025 | EXPANSION PIN, 5/16" X 2-3/4" |
| 12 | 1 | BFR312 | ASSY, COMPLETE FORK RH |
| * | 1 | BFR316 | ASSY, COMPLETE FORK LH |
| 13 | 2 | BFR57 | GREASE SEAL |
| 14 | 2 | 17G145 | TAPERED ROLLER BEARING, 1.249 BORE |
| 15 | 2 | BFR62 | OUTER BEARING |
| 16 | 2 | YWFL24010 | WASHER, FLAT, SAE 3/4, PLAIN |
| 17 | 2 | YNSL24010 | NUT, SLOT, 3/4-16, NA, G2, NF |
| 18 | 2 | BFR66 | HUB CAP |
| 19 | 2 | YPCT05010 | COTTER PIN, 5/32 X 1-1/2 |
| 20 | 10 | YNWL16005 | NUT, WHEEL, 1/2-20, NA, G5, ZC |
| 21 | 2 | BFR60 | HUB, WITH RACES AND STUDS |
| 22 | 4 | 72142 | HYD HOSE ASSY, 4 X 33, 6 JIC, 6 JIC |
| 23 | 3 | BFR635 | HOSE, 3/8" X 33"  1/2"FP & 1/2"MP |
| 24 | 1 | 56563 | CLAMP TOP PLATE |
| 25 | 2 | 67354 | HOSE CLAMP, DOUBLE, 1/4" |
| 26 | 4 | YPLY08011 | LYNCH PIN, 1/4 X 1-9/16 |
| 27 | 1 | YBHH10080 | BOLT, HEX, 5/16-18 X 2-1/2, G5, ZC |
| 28 | 2 | YBHH12115 | BOLT, HEX, FT, 3/8-16 X 3, G2, ZC |
| 29 | 14 | YBHH20025 | BOLT, HEX, 5/8-11 X 2, G5, ZC |
| 30 | 2 | YBHH20035 | BOLT, HEX, 5/8-11 X 2-1/2, G5, ZC |
| 31 | 4 | YWFL16005 | WASHER, FLAT, 1/2 USS |
| 32 | 14 | YWLO20005 | WASHER, LOCK, 5/8 |
| 33 | 14 | YNHX20007 | NUT, HEX, 5/8-11, NA, G8, ZY |
| 34 | 2 | YNNY12005 | NUT, HEX, 3/8-16, LKNY, G2, ZC |
| 35 | 2 | BFR128 | 670 X15 TIRE 6-PLY |
| 36 | 2 | BFR67 | WHEEL 5" X 15" BOLT |
| 37 | 2 | 72436 | VALVE STEM, 1-1/2" RUBBER |
| 38 | 2 | 32006 | 6.70-15 TIRE ON 5" X 15" WHEEL |

# PARTS NOTES

H&S Manufacturing products are approved for the
FEMA SEAL OF QUALITY

P.O. BOX 768, MARSHFIELD, WI 54449
(715) 387-3414 FAX (715) 384-5463
www.hsmfgco.com