4114

HI-CAPACITY RAKE

PARTS BOOK

Part #73133 HSMFG011722 Rev. #09 Starting Ser. #221HC14016

STRONG HERITAGE - STRONG PEOPLE - STRONGER FUTURE

CONTENTS

Instructions For Ordering Parts – About Improvements 1
Figure 1 - Front Pole Assembly 2-3
Figure 2 – Frame & Components 4-5
Figure 3 – Back Linkage Assembly 6-7
Figure 4 – Rear Pivot & Components 8-9
Figure 5 – Rear Hub Assembly 10-11
Figure 6 – Linkage Assembly 12-13
Figure 7 – RH Rake Beam Assembly 14-15
Figure 8 – LH Rake Beam Assembly 16-17
Figure 9 – Rake Wheel Assembly 18-19
Figure 10 – Hub & Brake Assembly 20-21
Figure 11 – Hydraulics 22-23
Figure 12 – Hydraulic Lift Cylinder 24-25
Figure 13 – Hydraulic Opening Cylinder 26-27
Figure 14 – Optional 15” Gauge Wheel 28-29
Figure 15 – Optional 2 Wheel Extension 30-31
Figure 16 – Optional 2 Wheel Center Kicker Wheel 32-33
Figure 17 – Optional Wind Guard. 34-35
Figure 18 – Optional Rake Lights 36-37
Figure 19 – Optional Tire & Wheel 38-39
Parts Notes - 40

INSTRUCTIONS FOR ORDERING PARTS

All service parts should be ordered through your authorized H&S dealer. He will be able to give you faster service if you will provide them with the following:

1. Model & Serial Number - Both can be located on the left, rear main frame of your unit.

2. All references to left or right apply to the machine as viewed from the rear.

3. Parts should not be ordered from illustration only. Please order complete part number.

4. If your dealer has to order parts - give shipping instructions:

   VIA truck - large pieces (please specify local truck lines)

   VIA United Parcel Service (include full address)

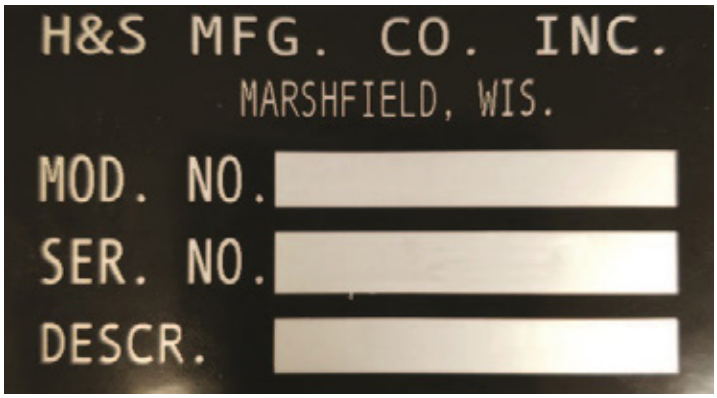

PLEASE RECORD NUMBERS FOR YOUR UNIT FOR QUICK REFERENCE

ABOUT IMPROVEMENTS

H&S IS CONTINUALLY STRIVING TO IMPROVE IT'S PRODUCTS

We must therefore, reserve the right to make improvements or changes whenever it becomes practical to do so, without incurring any obligation to make changes or additions to the equipment previously sold.

FIGURE 1
FRONT POLE ASSEMBLY

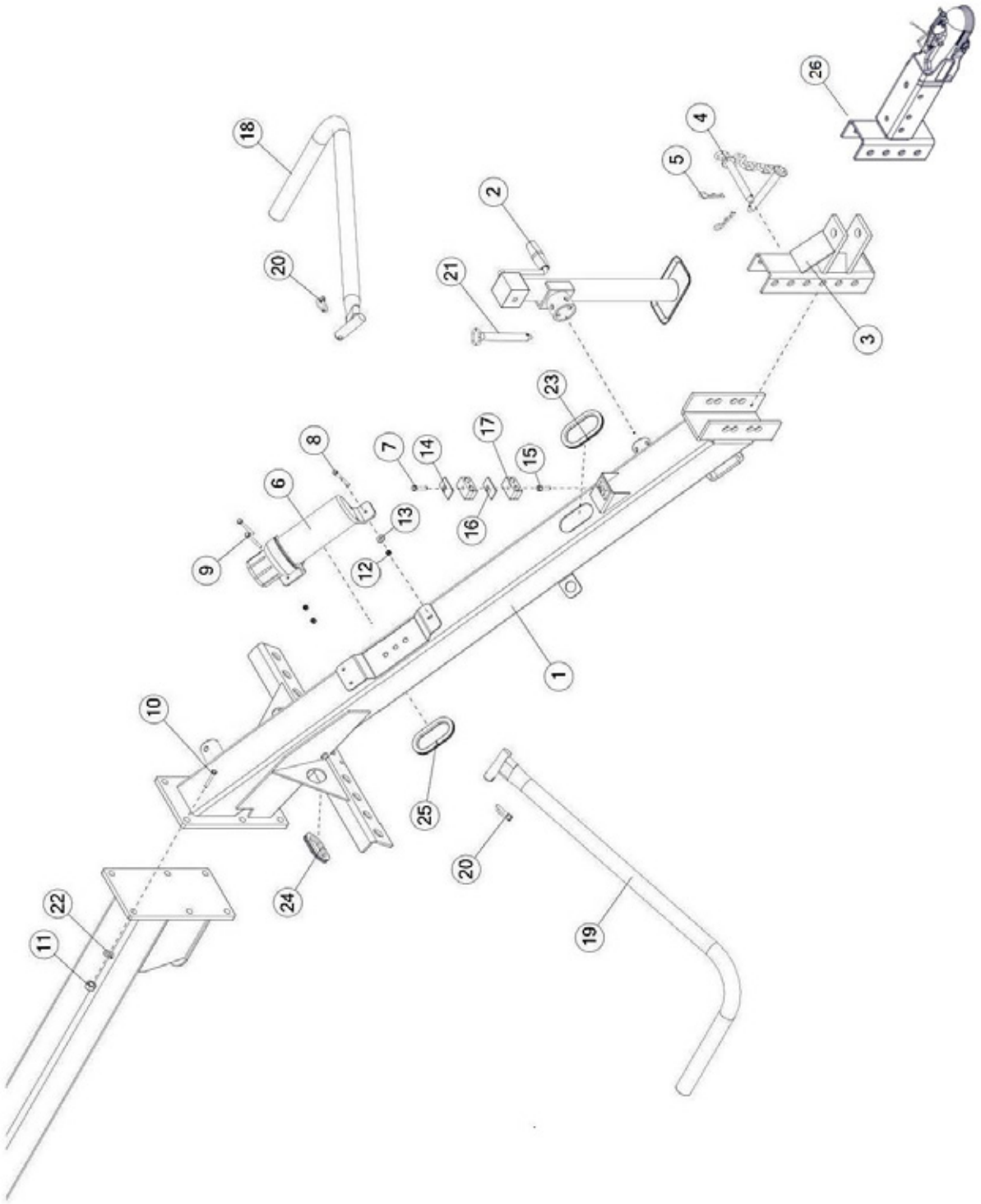

FIGURE 1
FRONT POLE ASSEMBLY

ITEM	QTY	PART#	DESCRIPTION
1	1	67220	POLE FRONT
2	2	BFR753A	SIDEWIND JACK
3	1	BFR157	HITCH
4	1	87599	HITCH PIN
5	2	YPHR02010	HAIR PIN
6	1	S522	MANUAL HOLDER
7	1	56568	CLAMP BOLT
8	1	YBHH08010	BOLT HEX, 1/4 X 1 G5
9	2	YBHH08100	BOLT HEX, 1/4 X 3/4 G5
10	6	YBHH20025	BOLT HEX, 5/8 X 2 G5
11	6	YNHX20010	NUT HEX, 5/8-18 G8
12	3	YNNY08005	NUT HEX, NYLON LOCKNUT, 1/4-20
13	3	YWFL08005	WASHER FLAT, 1/4
14	1	56563	CLAMP TOP PLATE
15	1	56573	CLAMP STACKING BOLT
16	1	56581	CLAMP TOP PLATE
17	2	67354	HOSE CLAMP, DOUBLE, 1/4
18	1	BFR452	TRANSPORT LOCK PIPE LH
19	1	BFR492	TRANSPORT LOCK PIPE RH
20	2	YPLY08011	LYNCH PIN, 1/4 X 1-9/16
21	1	12N117	JACK PIN
22	6	YWLO20005	WASHER LOCK, 5/8
23	1	67443	PLASTIC TRIM
24	1	67448	PLASTIC TRIM
25	1	67442	PLASTIC TRIM
26	1	76461	BALL HITCH, 2-5/16
*	1	78464	HITCH EXTENSION

***MEANS NOT SHOWN**

FIGURE 2
FRAME & COMPONENTS

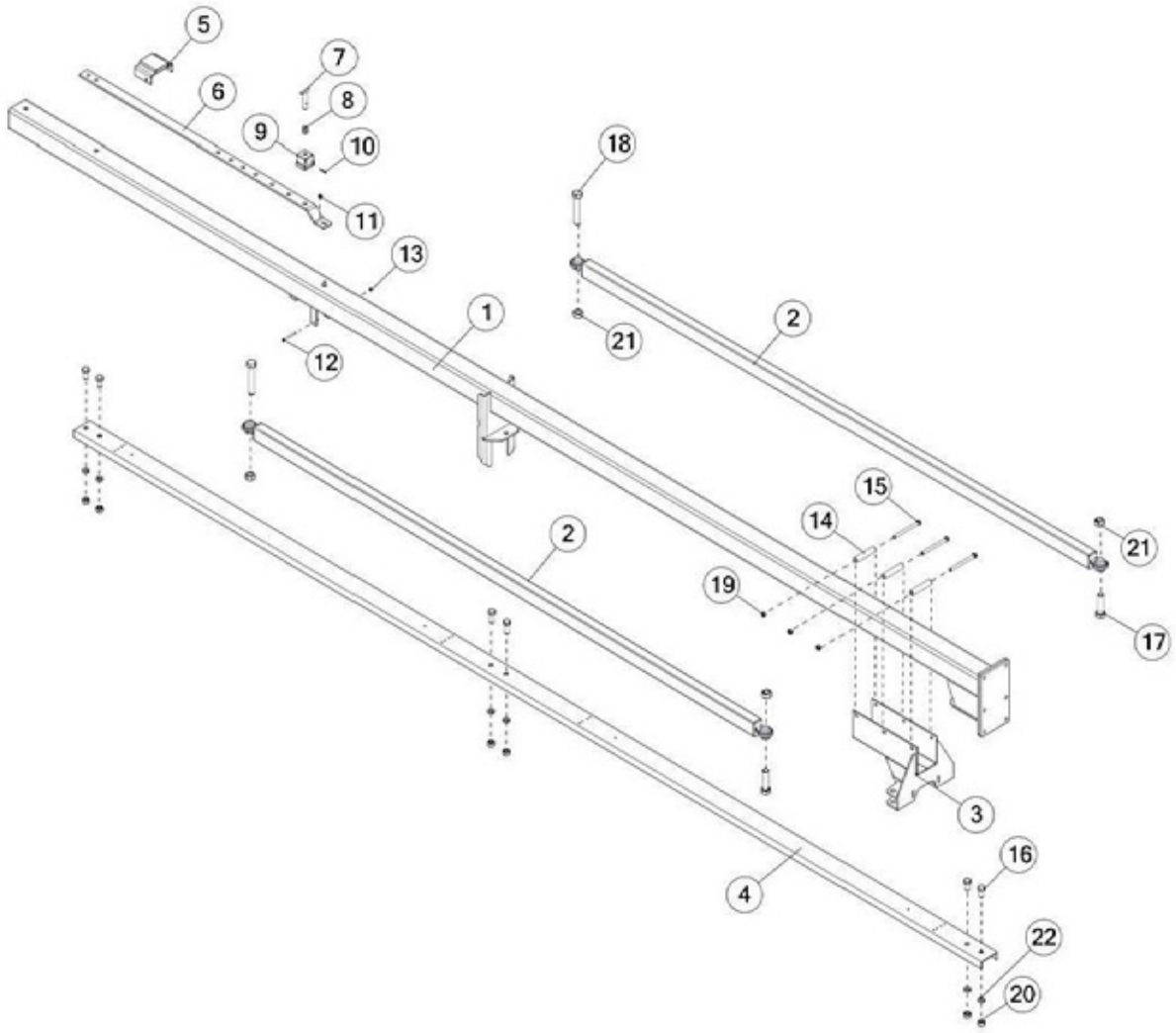

FIGURE 2
FRAME & COMPONENTS

ITEM	QTY	PART#	DESCRIPTION
1	1	67236	CENTER POLE
2	2	BFR458	LINKAGE, FRONT
3	1	73141	SLIDER, FRONT
4	1	70181	CHANNEL
5	1	67368	ADJUSTMENT STOP
6	1	67416	ADJUSTMENT BRACKET
7	1	BFR241	ADJUSTMENT HANDLE
8	1	BFR240	SPRING
9	1	BFR239	SLEEVE LOCK ADJUSTMENT
10	1	YPCT05005	COTTER PIN, 5/32 X 1
11	1	YBFB10002	BOLT FLG, 5/16 X 1/2 G5
12	1	YBHH08114	BOLT HEX, 1/4 X 4 G5
13	1	YNTL08005	NUT HEX, TOP LOCK, 1/4
14	3	BFR457	SLIDER SPACER
15	3	YBHH16165	BOLT HEX, 1/2 X 6 G5
16	6	YBHH24012	BOLT HEX, 3/4 X 1-1/2 G8
17	2	YBHH32015	BOLT HEX, 1-8 X 4 G5
18	2	YBHH32025	BOLT HEX, 1-8 X 6 G5
19	3	YNTL16005	NUT HEX, TOP LOCK, 1/2
20	6	YNHX24004	NUT HEX, 3/4 G5
21	4	YNTL32005	NUT HEX, TOP LOCK, 1
22	6	YWLO24005	WASHER LOCK, 3/4

FIGURE 3
BACK LINKAGE ASSEMBLY

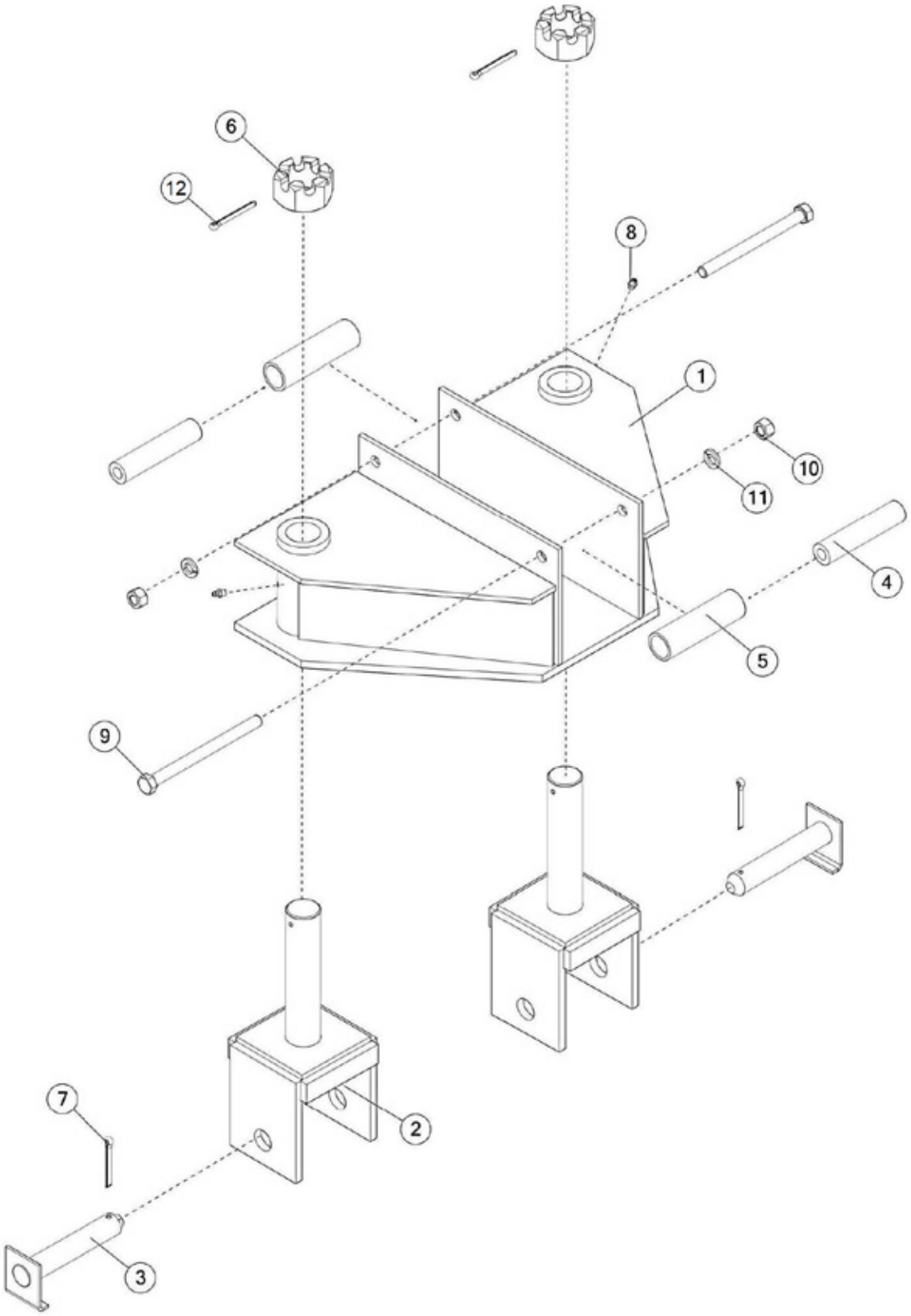

FIGURE 3
BACK LINKAGE ASSEMBLY

ITEM	QTY	PART#	DESCRIPTION
1	1	BFR491	LINKAGE SLIDER REAR
2	2	BFR476	LINKAGE YOKE REAR
3	2	BFR479	PIVOT YOKE SHAFT PIN
4	2	BFR457	SLIDER SPACER
5	2	BFR471	SLIDER ROLLER REAR
6	2	YNSL40005	NUT HEX, SLOTTED, 1-1/2
7	2	YPCT07005	COTTER PIN, 7/32 X 2
8	2	G89	STRAIGHT ZERK, 1/4-28
9	2	YBHH16175	BOLT HEX, 1/2 X 6-1/2 G5
10	2	YNHX16005	NUT HEX, 1/2
11	2	YWLO16005	WASHER LOCK, 1/2
12	2	YPCT06020	COTTER PIN, 3/16 X 2

FIGURE 4
REAR PIVOT & COMPONENTS

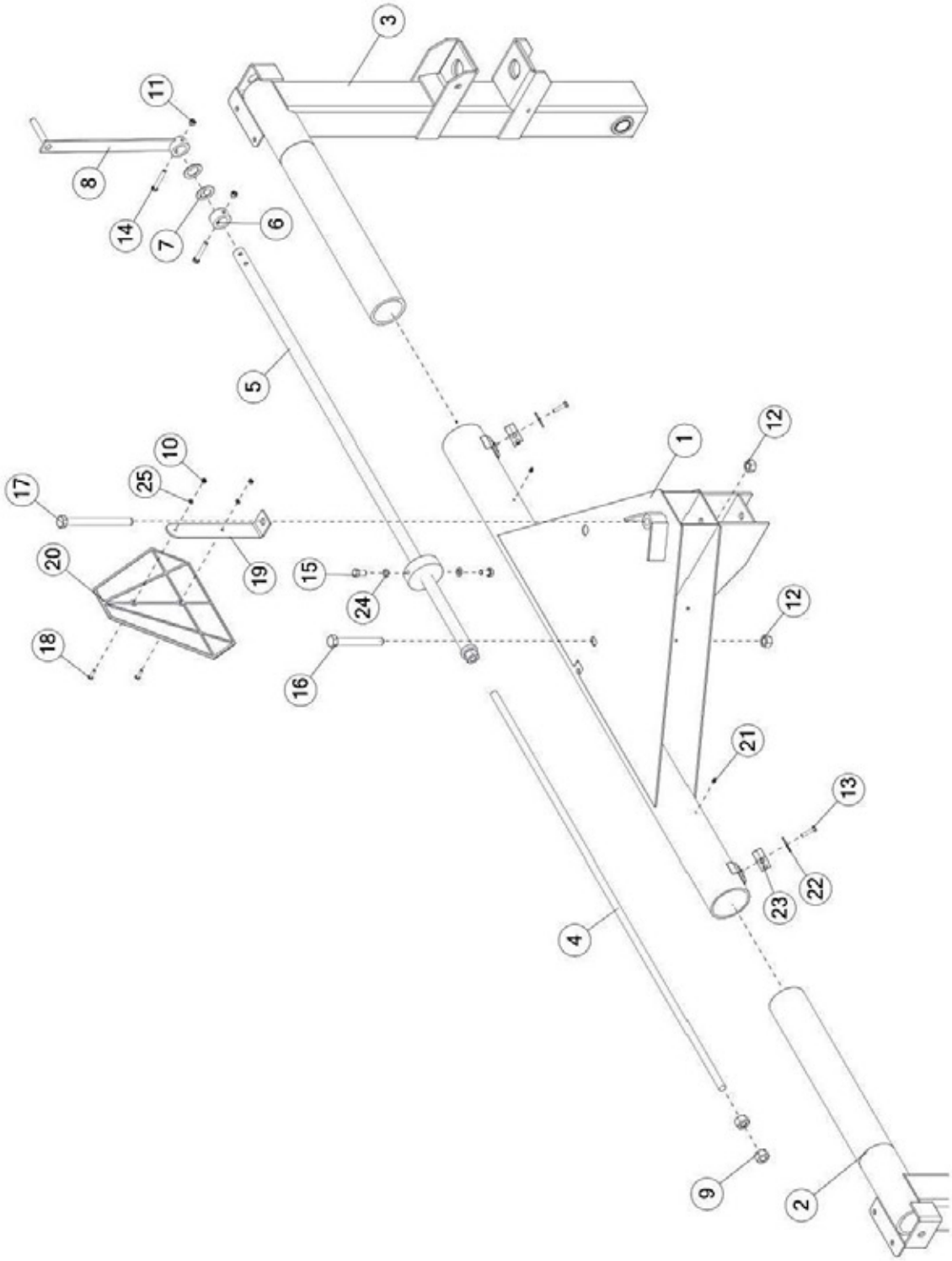

FIGURE 4
REAR PIVOT & COMPONENTS

ITEM	QTY	PART#	DESCRIPTION
1	1	67320	PIVOT REAR
2	1	66841	UPRIGHT RH
3	1	66837	UPRIGHT LH
4	1	66845	WIDTH ADJUSTMENT ROD REAR
5	1	66839	WIDTH ADJUSTMENT TUBE REAR
6	1	BFR422	WIDTH ADJUSTMENT COLLAR
7	2	BFR523	POLY WASHER
8	1	BFR423	WIDTH ADJUSTMENT HANDLE
9	2	YNAC24005	NUT HEX, 3/4
10	2	YNHX08005	NUT HEX, 1/4
11	2	YNHX12005	NUT HEX, 3/8 G2
12	2	YNTL24005	NUT HEX TOP LOCK, 3/4
13	2	56568	CLAMP BOLT
14	2	YBHH12090	BOLT HEX, 3/8 X 2-1/2 G5
15	2	YBHH16010	BOLT HEX, 1/2 X 1 G5
16	1	YBHH24090	BOLT HEX, 3/4 X 6 G5
17	1	YBHH24115	BOLT HEX, 3/4 X 8-1/2 G5
18	2	YSTM08005	SCREW TRUSS HEAD MACH, 1/4-20 X 1 G5
19	1	BFR649	SMV BRACKET
20	1	BFR723	SMV SIGN
21	2	G89	STRAIGHT ZERK 1/4-28 X 90
22	2	56563	CLAMP TOP PLATE
23	2	67354	HOSE CLAMP DOUBLE, 1/4
24	2	YWLO16005	WASHER LOCK, 1/2
25	2	YWLO08005	WASHER LOCK, 1/4

FIGURE 5
REAR HUB ASSEMBLY

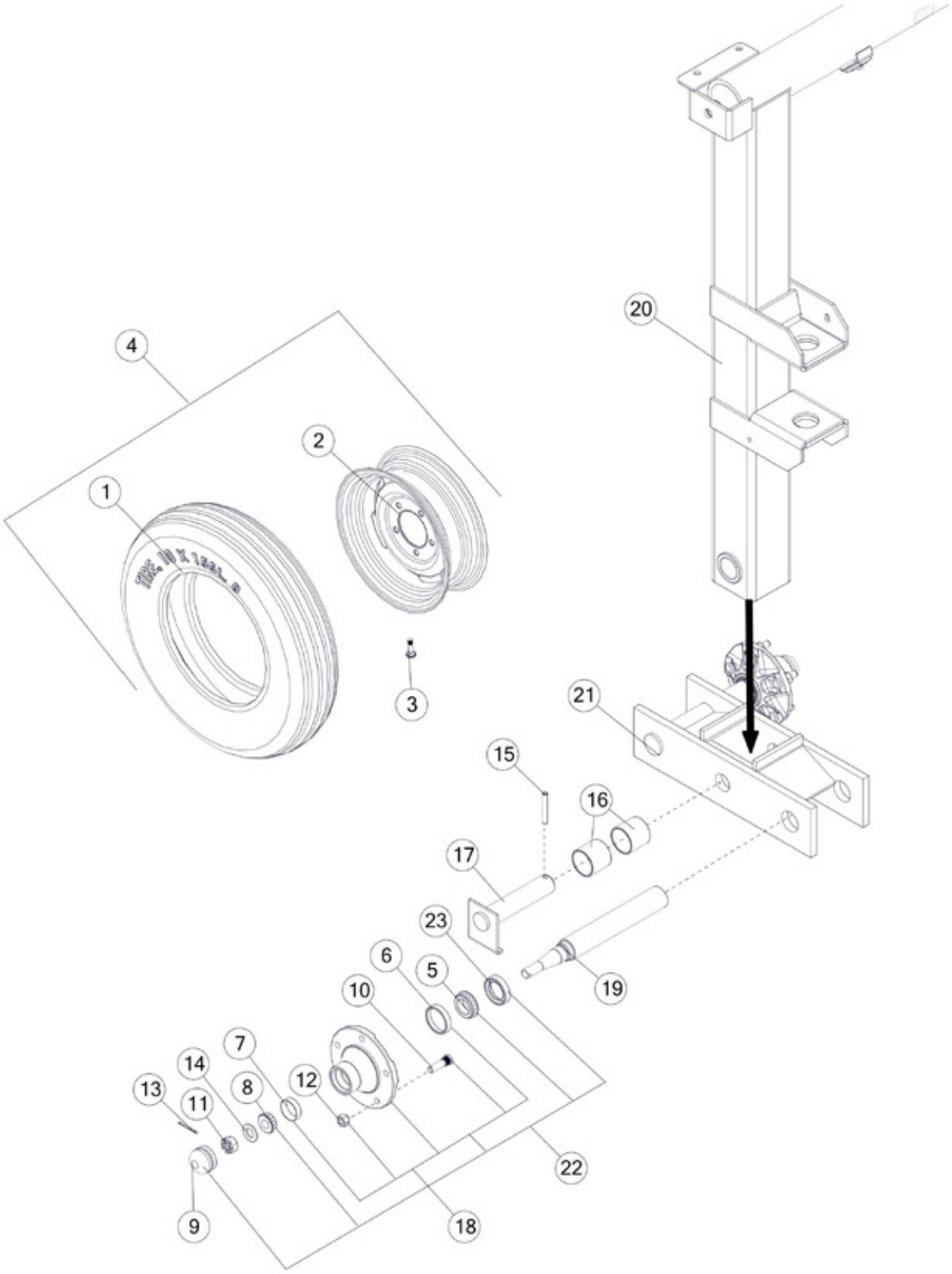

FIGURE 5
REAR HUB ASSEMBLY

ITEM	QTY	PART#	DESCRIPTION
1	4	BFR128	TIRE 670 X 15
*	4	75696	ST205/75R15-C RADIAL TIRE (OPTIONAL)
2	4	BFR67	WHEEL, 5 X 15
3	4	72436	VALVE STEM, 1-1/2
4	4	32006	TIRE ON 5 X 15 WHEEL
*	4	75697	205/75R15 TIRE ON AG WHEEL (OPTIONAL)
5	4	17G145	TAPERED ROLLER BEARING
6	4	BFR59	RACE
7	4	BFR61	CUP
8	4	BFR62	CONE BEARING
9	4	BFR66	HUB CAP
10	20	YBSD16005	BOLT STUD, 1/2 X 1-7/8 X 3/8 G5
11	4	YNSL24010	NUT SLOT, 3/4
12	20	YNWL16005	NUT WHEEL, 1/2-20 G5
13	4	YPCT05010	COTTER PIN, 5/32 X 1-1/2
14	4	YWFL24010	WASHER FLAT, 3/4
15	4	YPEX12025	EXPANSION PIN, 3/8 X 2-3/4
16	4	BFR625	BRONZE BUSHING
17	2	BFR524	TANDEM PIN
18	4	BFR60	HUB W/RACES AND STUDS
19	4	BFR522	SPINDLE
20	1	66841	UPRIGHT RH
*	1	66837	UPRIGHT LH
21	1	BFR509	TANDEM AXLE RH
*	1	BFR510	TANDEM AXLE LH
22	4	BFR75	HUB WITH KOYO BEARINGS
23	4	BFR57	SEAL

***MEANS NOT SHOWN**

FIGURE 6
LINKAGE ASSEMBLY

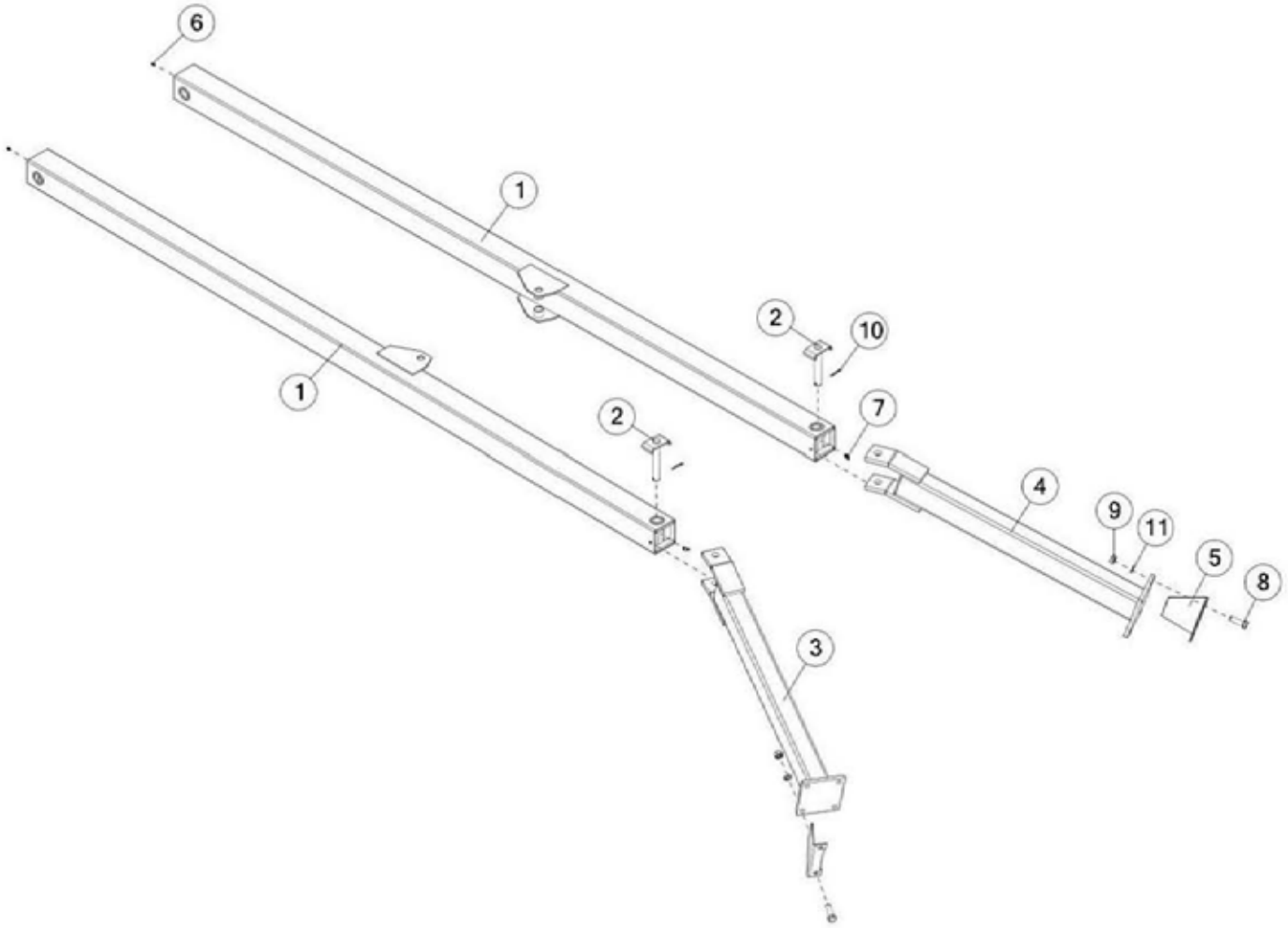

FIGURE 6
LINKAGE ASSEMBLY

ITEM	QTY	PART#	DESCRIPTION
1	2	BFR462	LINKAGE REAR RH
2	2	BFR461	RAKE BEAM PIN
3	1	BFR744	RAKE BEAM ARM, RH
4	1	BFR745	RAKE BEAM ARM, LH
5	2	BFR549	TOOTH DEFLECTOR
6	2	G89	STRAIGHT ZERK , 1/4-28 X 90
7	2	RG21	GREASE ZERK, 45 DEGREE
8	8	YBHH20025	BOLT HEX, 5/8 X 2 G5
9	8	YNHX20010	NUT HEX, 5/8-18 G8
10	2	YPCT05010	COTTER PIN, 5/32 X 1-1/2
11	8	YWLO20005	WASHER LOCK, 5/8

FIGURE 7
RH RAKE BEAM ASSEMBLY

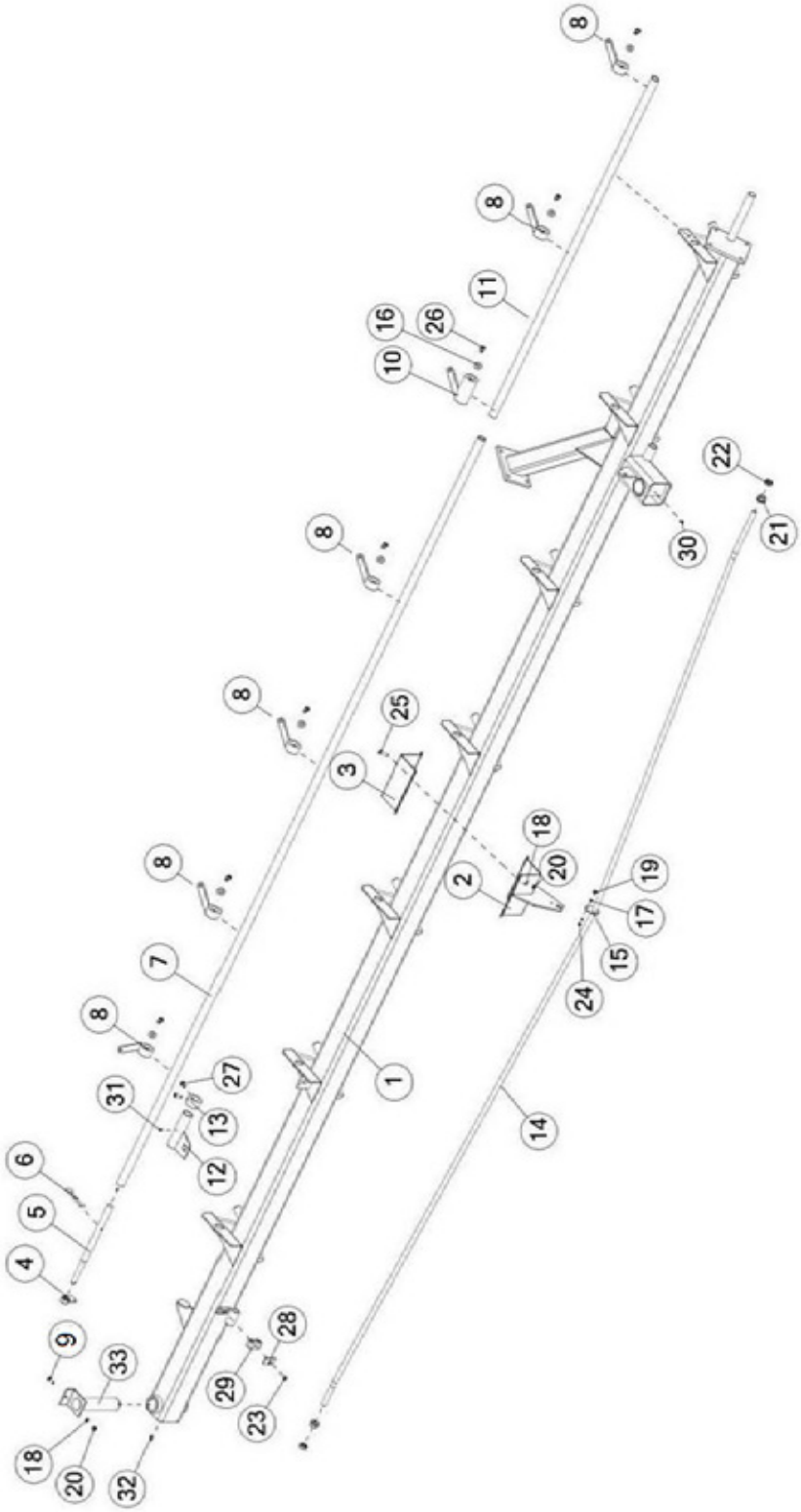

FIGURE 7
RH RAKE BEAM ASSEMBLY

ITEM	QTY	PART#	DESCRIPTION
1	1	67336	BEAM W/DECAL RH
2	1	14DWE85	ROD STANDOFF
3	1	14D3G18	ROD STAND-OFF BRACKET
4	1	BFR426	PRESSURE HANDLE
5	1	BFR486	LOCK-UP SHAFT
6	1	YPHR08040	HAIR PIN, 1/4 X 5
7	1	BFR521	LIFTING PIPE BACK
8	6	BFR622	SPRING BRACKET
9	1	YBHH12010	BOLT HEX, 3/8 X 1 G5
10	1	BFR749	LONG LIFT PIPE CONNECTOR RH
11	1	BFR520	LIFT PIPE FRONT
12	1	BFR531	HYD CYLINDER END SLIDE RH
13	1	BFR83	PIPE CLAMP
14	1	BFR612	SIDE ARM STABILIZER ROD
15	1	DF22	RING FOR STRAP
16	7	YWFL14005	WASHER FLAT, 7/16
17	2	YWLO08005	WASHER LOCK, 1/4
18	7	YWLO12005	WASHER LOCK, 3/8
19	1	YNHX08005	NUT HEX, 1/4
20	7	YNHX12005	NUT HEX, 3/8 G2
21	2	BFR618	NUT FLANGE,, 3/4
22	2	YNJM24012	NUT JAM, 3/4 A
23	1	56568	CLAMP BOLT
24	1	YBHH08010	BOLT HEX, 1/4 X 1 G5
25	6	YBHH12035	BOLT HEX, 3/8 X 1-1/4 G5
26	7	YBHH14005	BOLT HEX, 7/16 X 1 G5
27	2	YBHH14035	BOLT HEX, 7/16 X 3/4 G5
28	1	56563	CLAMP TOP PLATE
29	1	67354	HOSE CLAMP DOUBLE, 1/4
30	1	G89	STRAIGHT ZERK 1/4-28 X 90
31	1	MS26	SHORT SHANK ZERK
32	1	RG21	GREASE ZERK, 45 DEGREE
33	1	BFR756	BEAM PIVOT SHAFT

FIGURE 8
LH RAKE BEAM ASSEMBLY

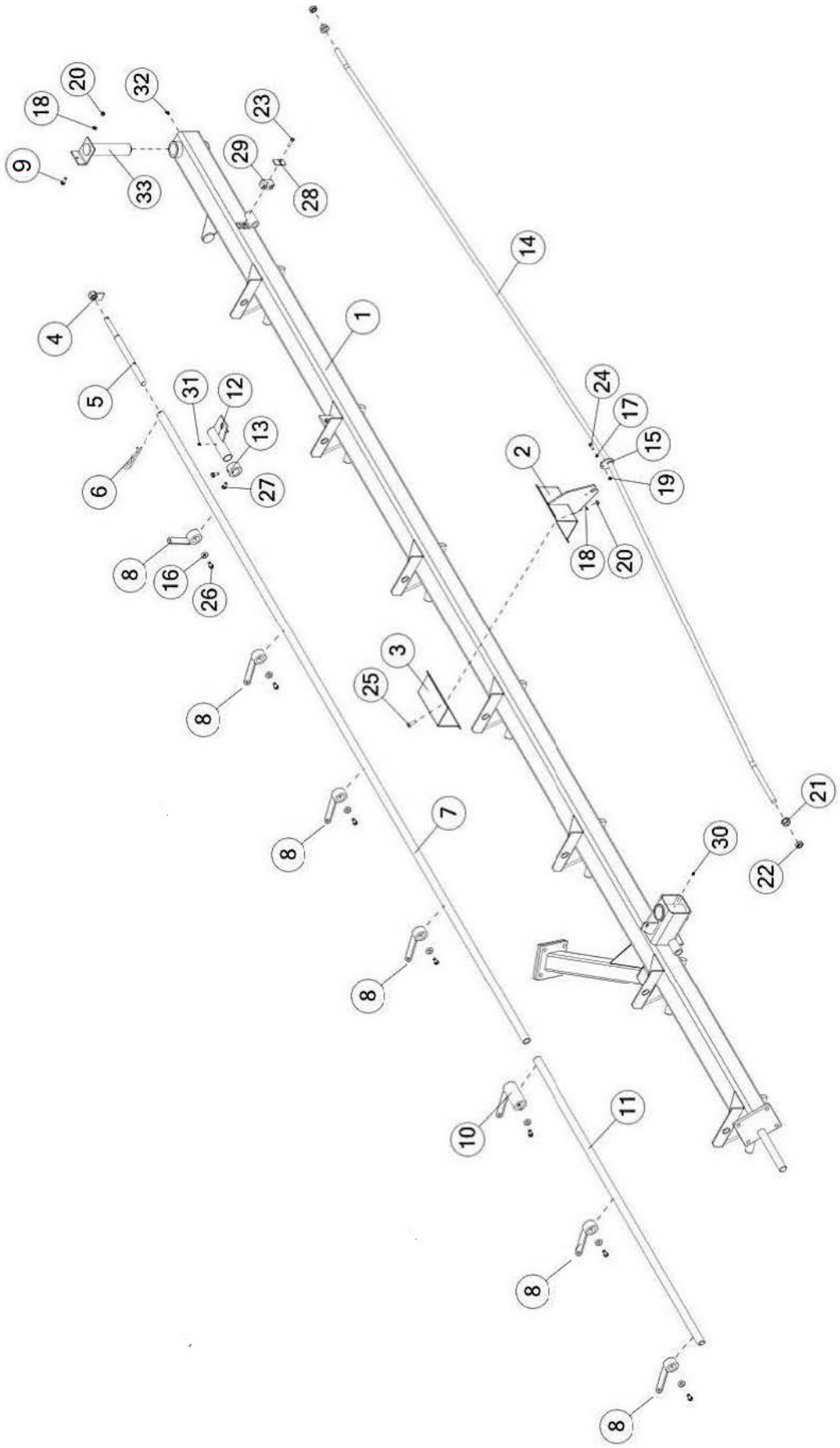

FIGURE 8
LH RAKE BEAM ASSEMBLY

ITEM	QTY	PART#	DESCRIPTION
1	1	67322	BEAM W/DECALS LH
2	1	14DWE85	ROD STANDOFF
3	1	14D3G18	ROD STAND-OFF BRACKET
4	1	BFR426	PRESSURE HANDLE
5	1	BFR486	LOCK-UP SHAFT
6	1	YPHR08040	HAIR PIN, 1/4 X 5
7	1	BFR521	LIFTING PIPE BACK
8	6	BFR622	SPRING BRACKET
9	1	YBHH12010	BOLT HEX, 3/8 X 1 G5
10	1	BFR750	LONG LIFT PIPE CONNECTOR LH
11	1	BFR520	LIFT PIPE FRONT
12	1	BFR530	HYD CYLINDER END SLIDE LH
13	1	BFR83	PIPE CLAMP
14	1	BFR612	SIDE ARM STABILIZER ROD
15	1	DF22	RING FOR STRAP
16	7	YWFL14005	WASHER FLAT, 7/16
17	2	YWLO08005	WASHER LOCK, 1/4
18	7	YWLO12005	WASHER LOCK, 3/8
19	1	YNHX08005	NUT HEX, 1/4
20	7	YNHX12005	NUT HEX, 3/8-16 G2
21	2	BFR618	NUT FLANGE, 3/4
22	2	YNJM24012	NUT JAM, 3/4 A
23	1	56568	CLAMP BOLT
24	1	YBHH08010	BOLT HEX, 1/4 X 1 G5
25	6	YBHH12035	BOLT HEX, 3/8-16 X 1-1/4 G5
26	7	YBHH14005	BOLT HEX, 7/16 X 1 G5
27	2	YBHH14035	BOLT HEX, 7/16 X 3/4 G5
28	1	56563	CLAMP TOP PLATE
29	1	67354	HOSE CLAMP, DOUBLE, 1/4
30	1	G89	STRAIGHT ZERK 1/4-28 X 90
31	1	MS26	SHORT SHANK ZERK
32	1	RG21	GREASE ZERK, 45 DEGREE
33	1	BFR756	BEAM PIVOT SHAFT

FIGURE 9
RAKE WHEEL ASSEMBLY

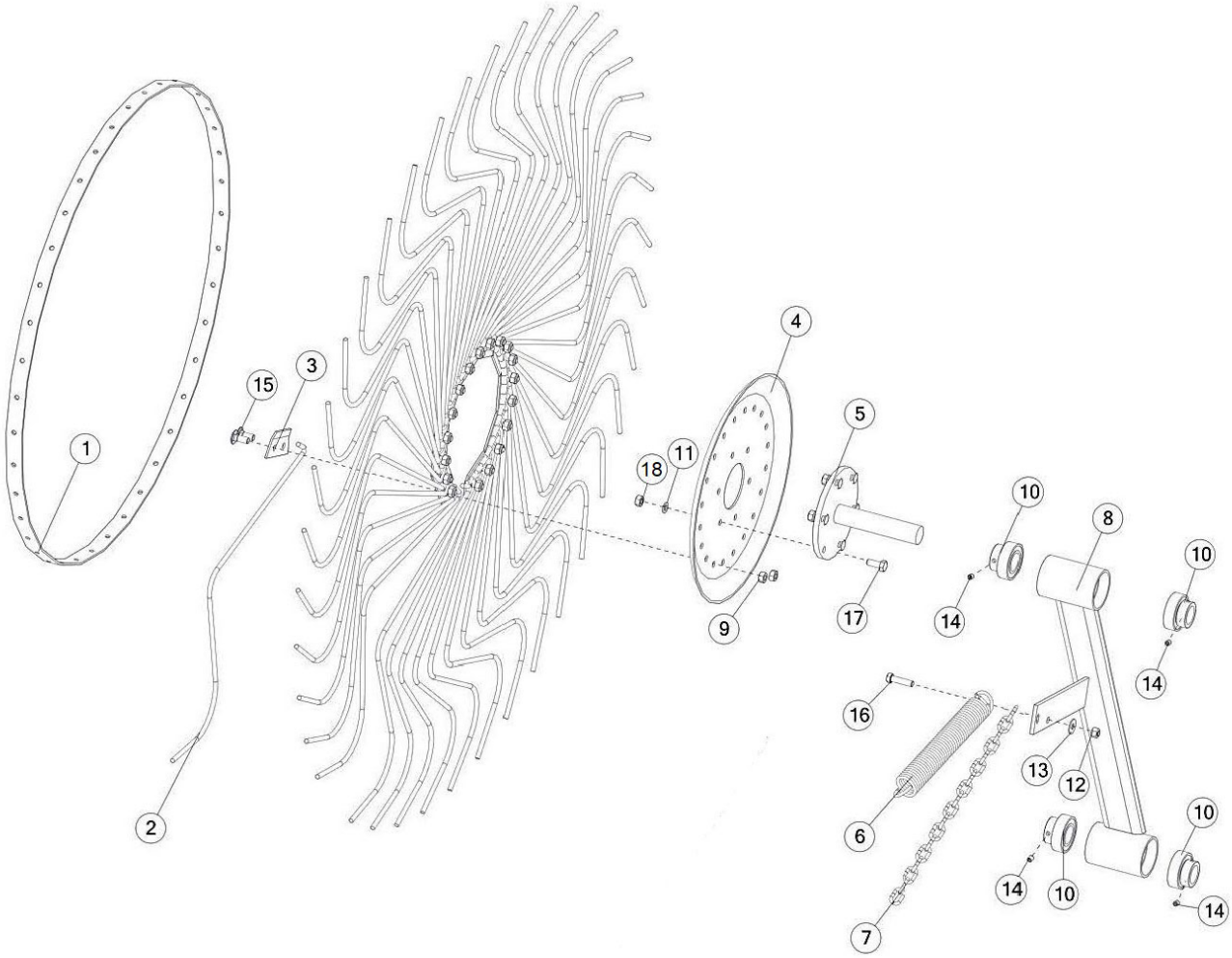

FIGURE 9
RAKE WHEEL ASSEMBLY

ITEM	QTY	PART#	DESCRIPTION
1	1	T177	RAKE WHEEL OUTER RING
2	40	T176	RAKE WHEEL TOOTH
3	10	T178	RAKE TOOTH CLIP
4	1	T179	RAKE WHEEL CENTER
5	1	BFR657	RAKE WHEEL HUB
6	1	BFR138	SPRING
7	1	BFR140	RAKE ARM ADJUSTMENT CHAIN
8	1	BFR489	RAKE ARM LH
*	1	BFR490	RAKE ARM RH
9	26	YNHX76015	NUT HEX, M10-1.5
10	4	BFR525	BEARING W/LOCK COLLAR
11	2	YWLO12005	WASHER LOCK, 3/8
12	1	YNTL12005	NUT HEX, TOP LOCK, 3/8
13	1	YWFL12005	WASHER FLAT, 3/8
14	5	YSKP10020	SET SCREW, SOCKET, 5/16 X 3/8
15	20	YBCR76005	BOLT CARRIAGE, 10MM X 25MM
16	1	YBHH12025	BOLT HEX, 3/8 X 1-1/2 G5
17	6	YBHH12035	BOLT HEX, 3/8 X 1-1/4 G5
18	6	YNHX12005	NUT HEX, 3/8 G5

***MEANS NOT SHOWN**

FIGURE 10
HUB & BRAKE ASSEMBLY

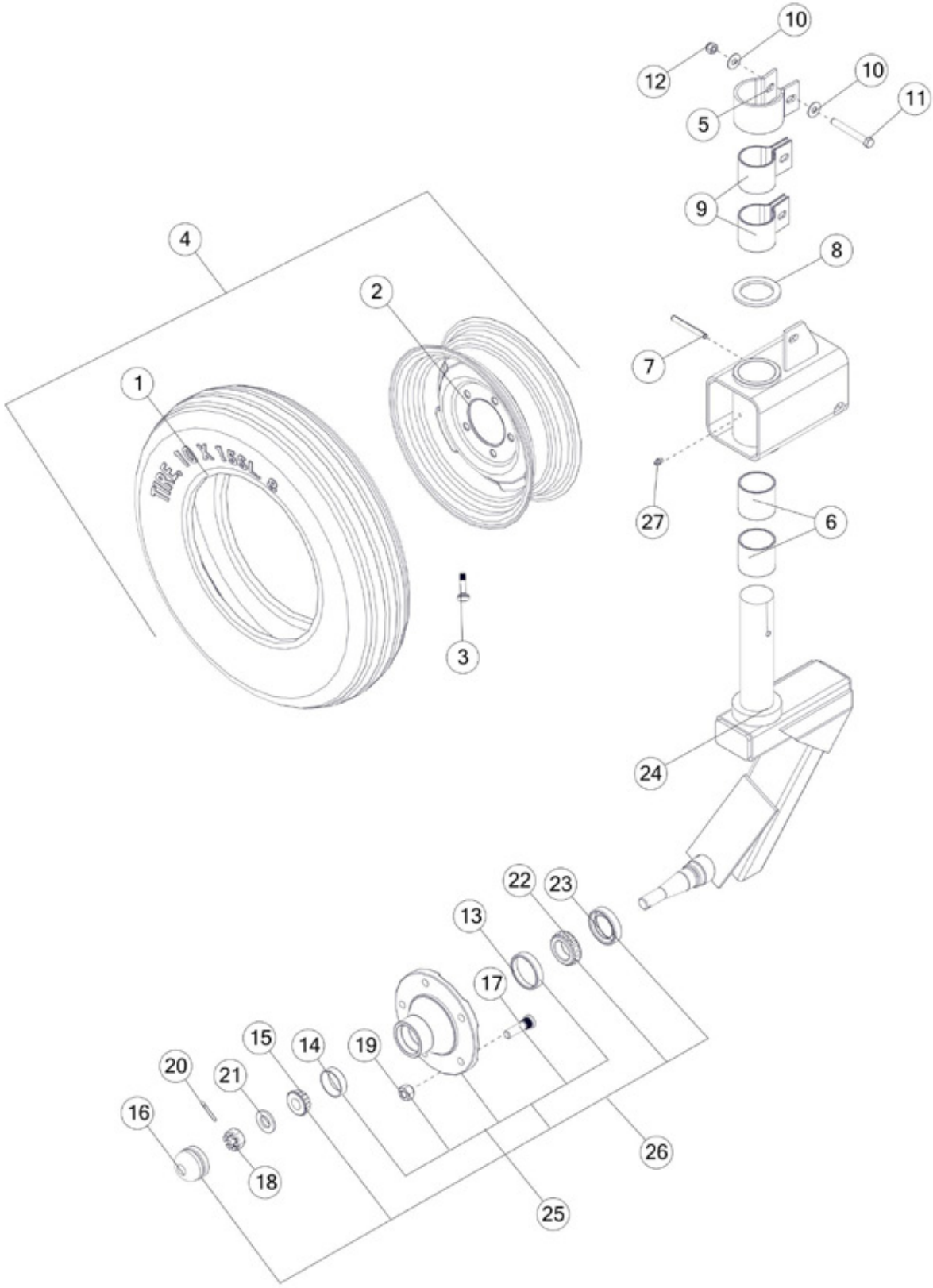

FIGURE 10
HUB & BRAKE ASSEMBLY

ITEM	QTY	PART#	DESCRIPTION
1	2	BFR128	TIRE 670 X 15
2	2	BFR67	WHEEL, 5 X 15
3	2	72436	VALVE STEM, 1-1/2
4	2	32006	TIRE ON 5 X 15 WHEEL
5	2	BFR311	BRAKE COLLAR
6	4	RG26	STEEL BUSHING
7	2	YPEX10025	EXPANSION PIN, 5/16 X 2-3/4
8	1	BFR309	GAUGE WHEEL WASHER
9	4	BFR310	BRAKE PAD
10	4	YWFL12005	WASHER FLAT, 3/8
11	2	YBHH12125	BOLT HEX, 3/8 X 3 G5
12	2	YNNY12005	NUT HEX, 3/8
13	2	BFR57	SEAL
14	2	BFR61	CUP
15	2	BFR62	CONE BEARING
16	2	BFR66	HUB CAP
17	10	YBSD16005	BOLT STUD, 1/2 X 1-7/8 X 3/8 G5
18	2	YNSL24010	NUT SLOT, 3/4-16 G2
19	10	YNWL16005	NUT WHEEL, 1/2-20 G5
20	2	YPCT05010	COTTER PIN, 5/32 X 1-1/2
21	2	YWFL24010	WASHER FLAT, 3/4
22	2	17G145	TAPERED ROLLER BEARING
23	2	BFR57	SEAL
24	1	BFR312	GAUGE WHEEL FORK RH
*	1	BFR316	GAUGE WHEEL FORK LH
25	2	BFR60	HUB W/RACES AND STUDS
26	2	BFR75	HUB WITH KOYO BEARINGS
27	2	G89	STRAIGHT ZERK 1/4-28 X 90

***MEANS NOT SHOWN**

FIGURE 11
HYDRAULICS

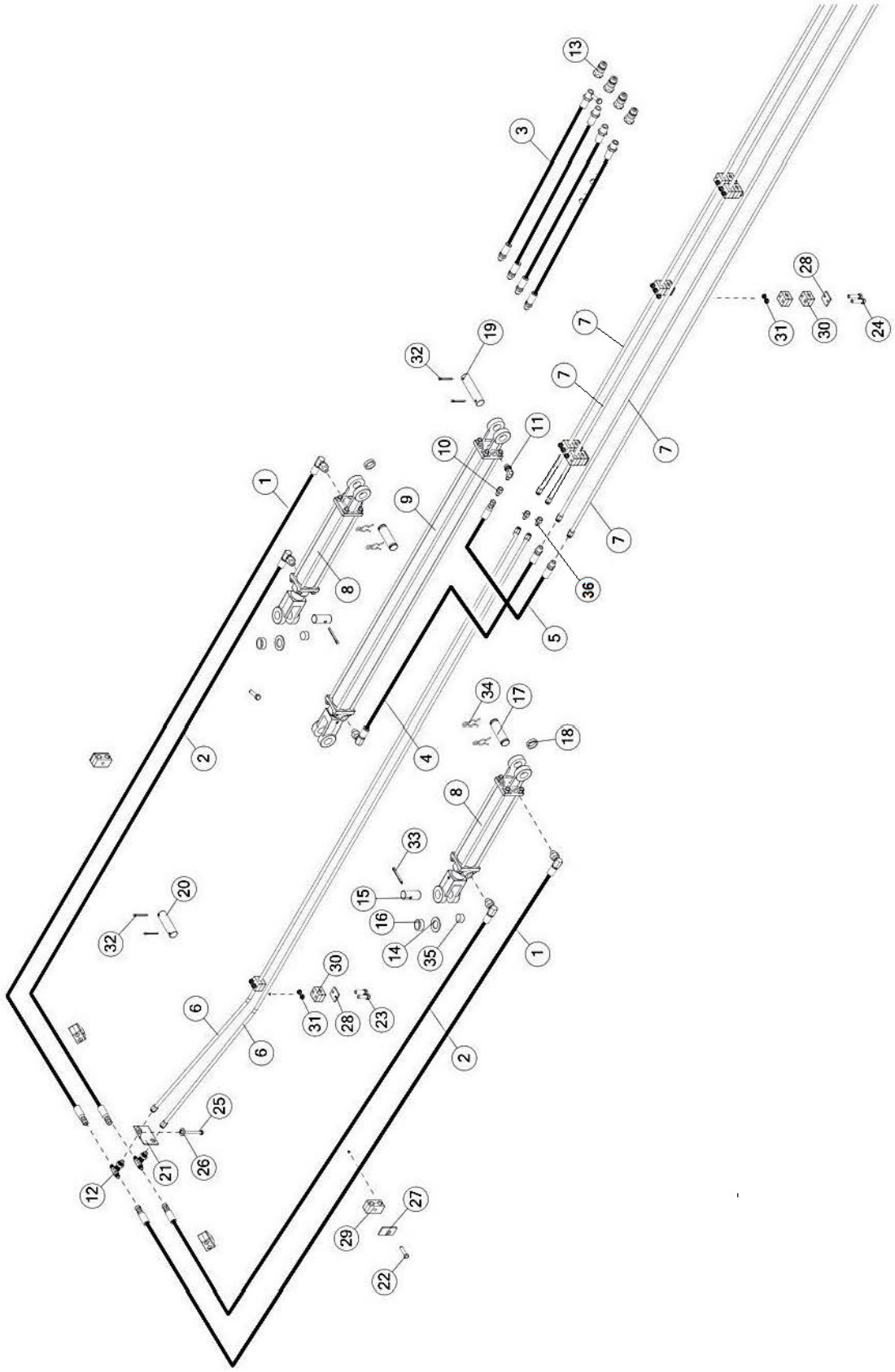

FIGURE 11
HYDRAULICS

ITEM	QTY	PART#	DESCRIPTION
1	2	67077	HYD HOSE 4 X 108, 6ORB, 4JIC
2	2	67420	HYD HOSE 4 X 120, 6ORB, 4JIC
3	4	70700	HYD HOSE 4 X 136, 4JIC, 8ORB
4	1	70706	HYD HOSE 4 X 33, 4JIC, 6ORB
5	1	70710	HYD HOSE 4 X 30, 4JIC, 4JIC SWIVEL
6	2	89070	HYD TUBE
7	4	70613	HYD TUBE
8	2	66933	HYD CYLINDER 2 X 10
9	1	66935	HYD CYLINDER 2 X 40
10	1	58108	CONNECTOR W/ORIFICE
11	1	71281	MALE FITTING
12	2	71585	BULKHEAD TEE FITTING
13	4	67148	QUICK COUPLER
14	2	16SV136	WASHER FLAT
15	2	BFR517	CYLINDER PIN BACK
16	2	K106	SPACER
17	2	T143	HYD CYLINDER PIN
18	2	X94	1ST BEATER SPACER
19	1	BFR396	CYLINDER PIN
20	1	BFR634	CYLINDER PIN
21	1	66939	BRACKET, MOUNT, HYD BULKHEAD T
22	4	56568	CLAMP BOLT
23	4	YBHH08045	BOLT HEX, 1/4 X 2 G5
24	12	YBHH08085	BOLT HEX, 1/4 X 3 G5
25	1	YBHH16010	BOLT HEX, 1/2 X 1 G5
26	1	YWLO16005	WASHER LOCK, 1/2
27	4	56563	CLAMP TOP PLATE
28	8	CHM273	CLAMP TOP PLATE
29	4	67354	HOSE CLAMP, DOUBLE, 1/4
30	8	CHM280	HOSE CLAMP, 3/8
31	14	YNFG08010	NUT HEX, FLANGE, NYLOCK, 1/4-20
32	4	YPCT05010	COTTER PIN 5/32 X 1-1/2
33	2	YPCT07005	COTTER PIN, 7/32 X 2
34	4	YPHR02020	HAIR PIN
35	2	BFR506	NYLON WEAR BLOCK
36	2	CHM258	FITTING, UNION

FIGURE 12
HYDRAULIC LIFT CYLINDER

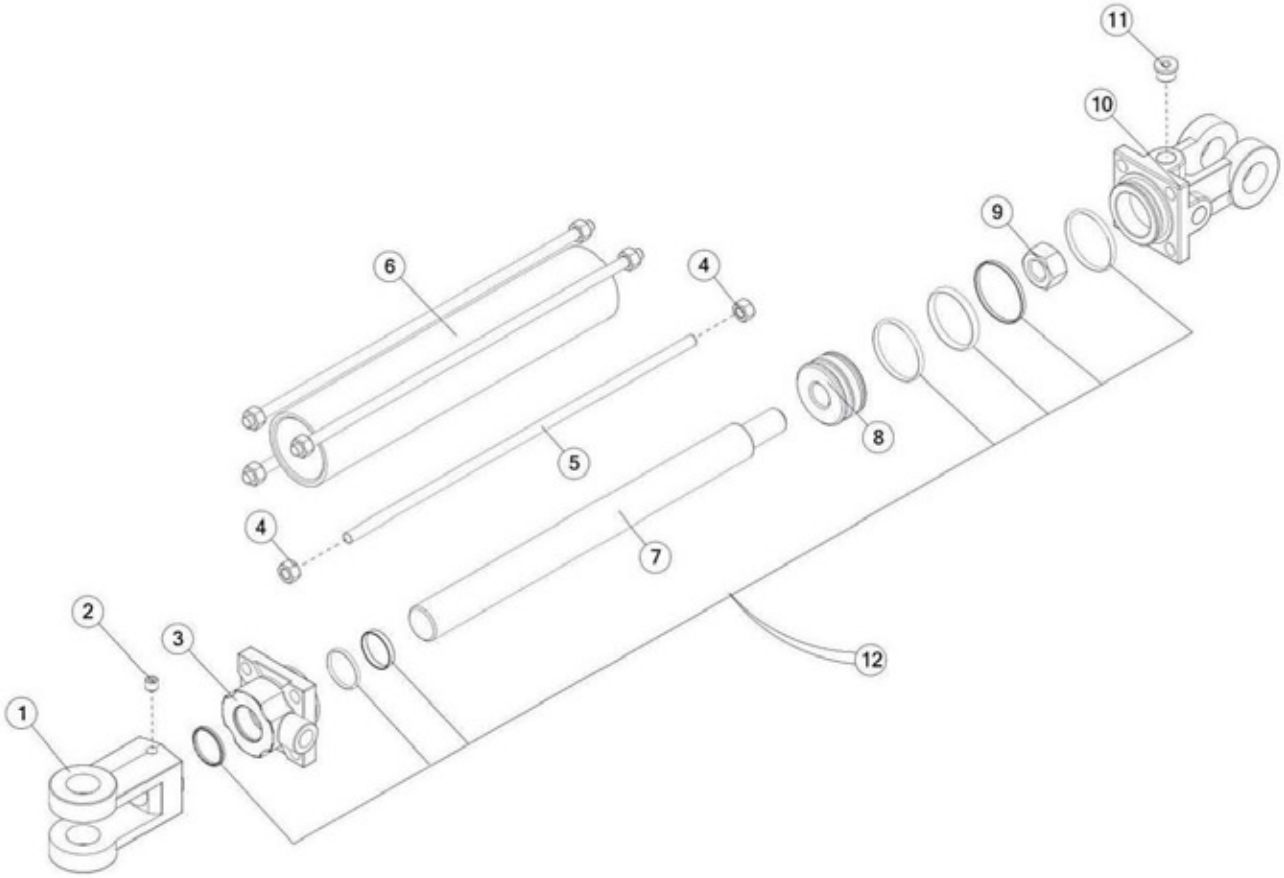

FIGURE 12
HYDRAULIC LIFT CYLINDER

ITEM	QTY	PART#	DESCRIPTION
1	1	23N150A	ROD CLEVIS
2	1	YSSO12015	SET SCREW, SOCKET, 3/8 X 3/8
3	1	66934	ROD CAP
4	8	YNHX12006	NUT HEX, 3/8-24
5	4	16SV170	TIE ROD
6	1	16SV169	CYLINDER TUBE
7	1	16SV168A	CYLINDER ROD
8	1	56180	PISTON
9	1	23N148	PISTON NUT
10	1	66932	CLEVIS CAP
11	1	SD270	PLUG 6
12	1	56187	SEAL KIT
*	1	66933	HYD CYLINDER 2 X 10

***MEANS NOT SHOWN**

FIGURE 13
HYDRAULIC OPENING CYLINDER

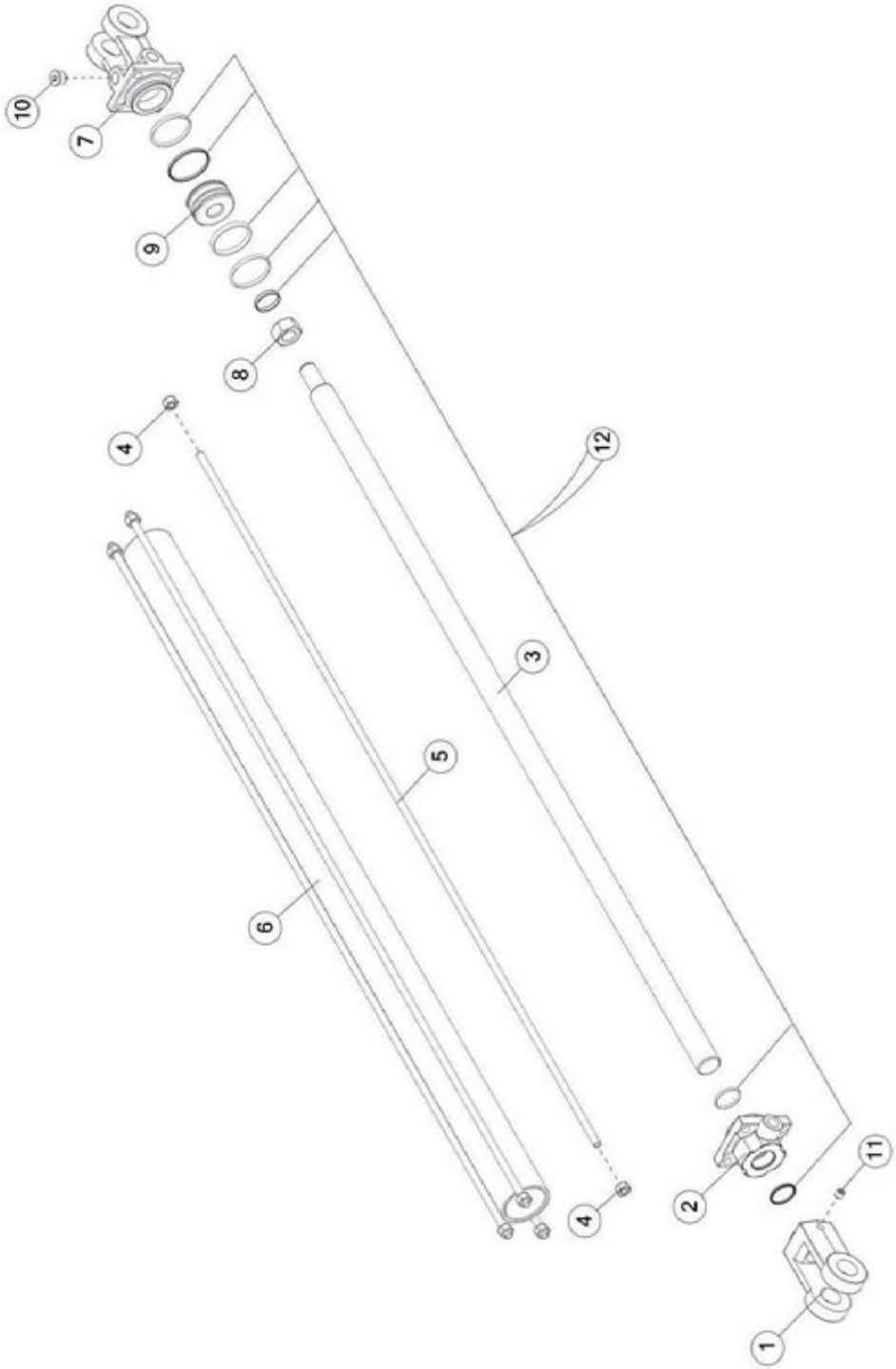

FIGURE 13
HYDRAULIC OPENING CYLINDER

ITEM	QTY	PART#	DESCRIPTION
1	1	23N150A	ROD CLEVIS
2	1	56174	ROD CAP
3	1	BFR654	ROD
4	8	YNHX10005	NUT HEX, 5/16 G2
5	4	BFR656	TIE ROD
6	1	BFR655	CYLINDER TUBE
7	1	23N142A	CLEVIS CAP
8	1	23N148	PISTON NUT
9	1	56180	PISTON
10	1	SD270	HEX PLUG
11	1	YSSO12015	SET SCREW, SOCKET, 3/8 X 3/8
12	1	56187	SEAL KIT FOR 2
*	1	66935	HYD CYLINDER 2 X 40

***MEANS NOT SHOWN**

FIGURE 14
OPTIONAL 15” GAUGE WHEEL

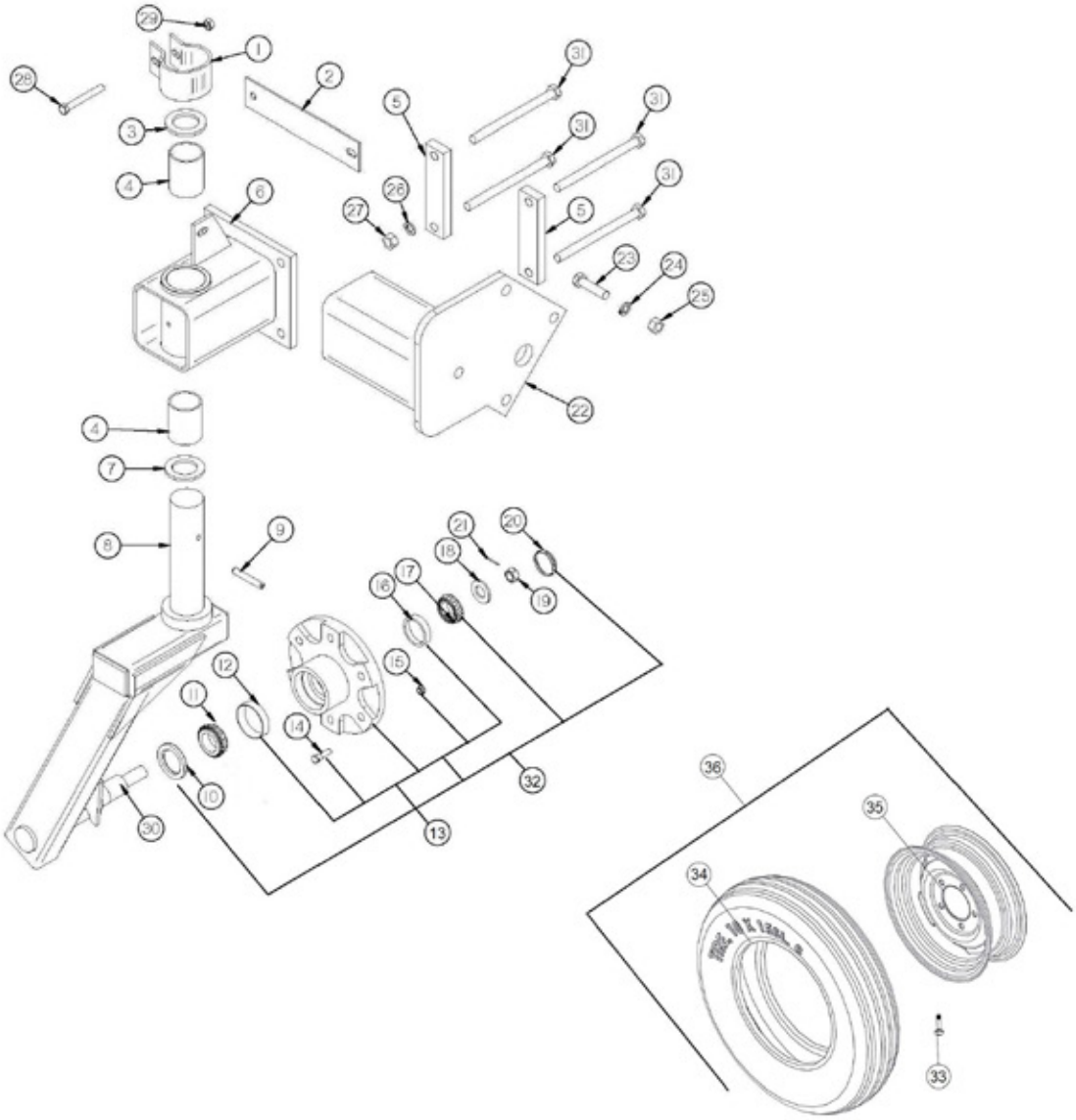

FIGURE 14
OPTIONAL 15” GAUGE WHEEL

ITEM	QTY	PART#	DESCRIPTION
1	1	BFR311	BRAKE COLLAR
2	1	BFR310	BRAKE PAD
3	1	BFR309	GAUGE WHEEL WASHER
4	2	RG26	STEEL BUSHING
5	2	BFR725	MOUNTING STRAP
6	1	BFR643	GAUGE WHEEL MOUNT
7	1	RG24	BRONZE WASHER
8	1	BFR316	GAUGE WHEEL FORK LH
*	1	BFR312	GAUGE WHEEL FORK RH
9	1	YPEX10025	EXPANSION PIN, 5/16 X 2-3/4
10	1	BFR57	SEAL
11	1	BFR58	INNER BEARING
12	1	BFR59	INNER RACE
13	1	BFR60	HUB
14	6	YBSD16005	BOLT STUD, 1/2 X 1-7/8
15	6	YNWL16005	WHEEL NUT, 1/2
16	1	BFR61	OUTER RACE
17	1	BFR62	OUTER BEARING
18	1	YWFL24010	WASHER FLAT, 3/4
19	1	YNSL24010	NUT HEX, SLOTTED, 3/4
20	1	BFR66	HUB CAP
21	1	YPCT05010	COTTER PIN, 5/32 X 1-1/2
22	1	BFR644	GAUGE WHEEL EXTENSION LH
*	1	BFR645	GAUGE WHEEL EXTENSION RH
23	1	YBHH20025	BOLT HEX, 5/8 X 2 G5
24	4	YWLO20005	WASHER LOCK, 5/8
25	4	YNHX20005	NUT HEX, 5/8
26	4	YWLO16005	WASHER LOCK, 1/2
27	4	YNHX16005	NUT HEX, 1/2
28	4	YBHH12115	BOLT HEX, FT, 3/8-16 X 3, G2
29	1	YNHX12005	NUT HEX, 3/8-16
30	1	BFR56	SPINDLE
31	1	YBHH16175	BOLT HEX, 1/2 X 6-1/2 G5
32	1	BFR75	COMPLETE HUB
33	1	72436	VALVE STEM, 1-1/2
34	1	BFR128	TIRE 670 X 15
35	1	BFR67	WHEEL, 5 X 15
36	1	32006	6.70-15 TIRE ON 5 X 15 WHEEL

***MEANS NOT SHOWN**

FIGURE 15
OPTIONAL 2 WHEEL EXTENSION

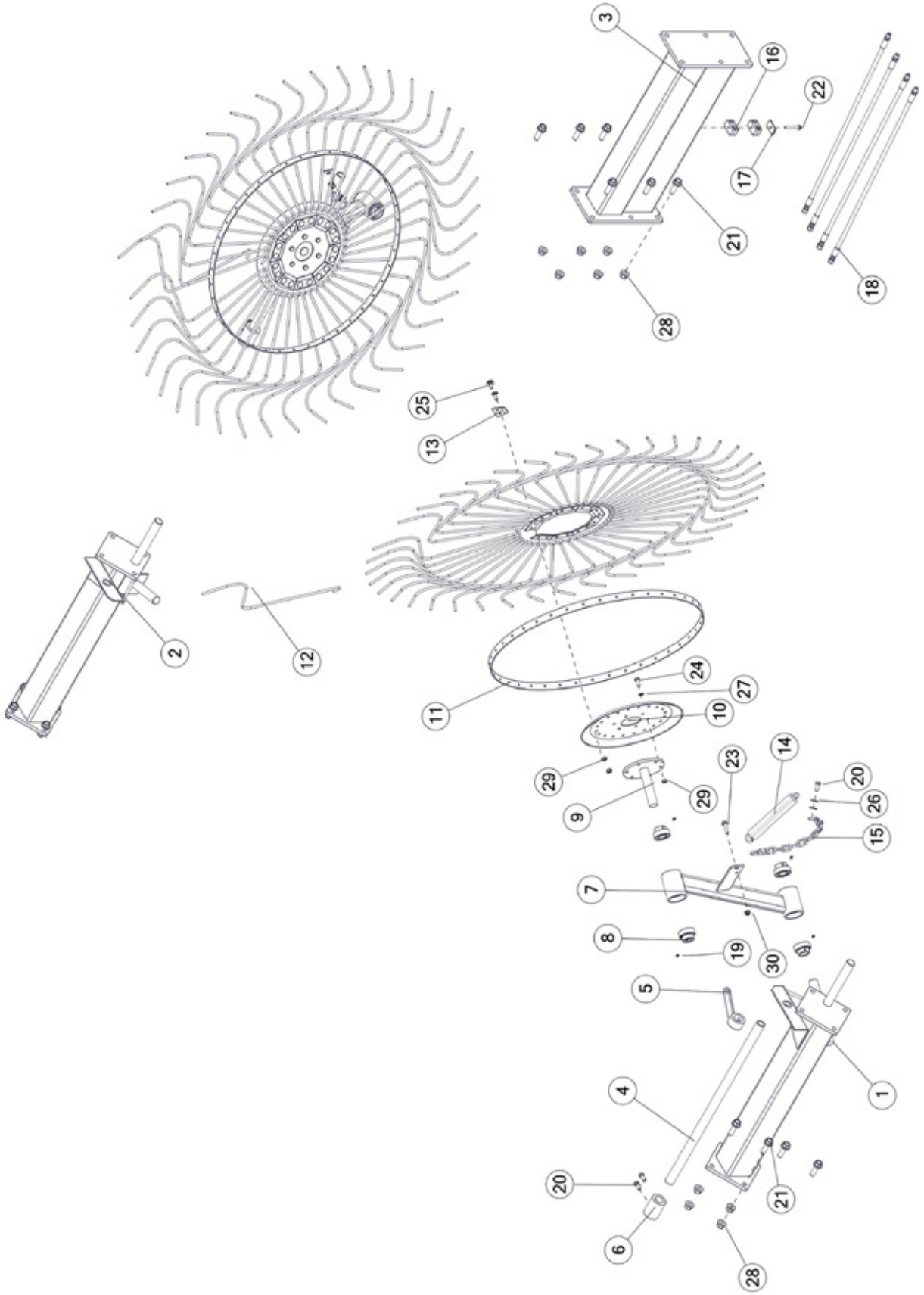

FIGURE 15
OPTIONAL 2 WHEEL EXTENSION

ITEM	QTY	PART#	DESCRIPTION
1	1	BFR733	RAKE BEAM EXTENSION RIGHT
2	1	BFR734	RAKE BEAM EXTENSION LEFT
3	1	67429	POLE EXTENSION
4	2	BFR536	LIFTING PIPE EXT
5	2	BFR622	SPRING BRACKET
6	2	BFR537	LIFTING PIPE CONNECTOR
7	1	BFR490	RAKE ARM RH
*	1	BFR489	RAKE ARM LH
8	8	BFR525	BALL BEARING, 1.25, W/LOCK COLLAR
9	2	BFR657	RAKE WHEEL HUB
10	2	T179	RAKE WHEEL CENTER-CREAM
11	2	T177	RAKE WHEEL OUTER RING-CREAM
12	40	T176	REGULAR RAKE WHEEL TOOTH, 55”, CREAM
13	20	T178	RAKE TOOTH CLIP-CREAM
14	2	BFR138	SPRING
15	2	BFR140	RAKE ARM ADJUSTMENT CHAIN
16	2	67354	HOSE CLAMP, DOUBLE, 1/4”
17	1	56563	CLAMP TOP PLATE
18	4	72142	HYD HOSE ASSY, 4 X 33, 6 JIC, 6JIC
19	8	YSKP10020	SET SCREW, SCKT, KNRLD CP PT, 5/16-24X3/8 W/NYL PTCH
20	6	YBHH14005	BOLT FLANGE, 7/16-14 X 1 G5
21	14	YBFB20200	BOLT FLANGE, 5/8 X 2 G5
22	1	YBFB10250	BOLT FLANGE, 5/16 X 2-1/2 G5
23	2	YBFB12150	BOLT FLANGE, 3/8 X 1-1/2 G5
24	12	YBHH76015	BOLT HEX, M10-1.5 X 25 10.9 ZC
25	40	YBCR76005	BOLT CARRAIGE, M10-1.5 X 25MM 8.8 NF
26	4	YWFL14005	WASHER FLAT, 7/16 USS, ZINC
27	12	YWLO76015	WASHER LOCK, M10
28	14	YNFG20005	NUT FLANGE, 5/8-11 LKTL F ZC
29	40	YNHX76015	NUT HEX, M10-1.5 NA CL10 ZC
30	2	YNFG12006	NUT FLANGE, 3/8 GF

***MEANS NOT SHOWN**

FIGURE 16
OPTIONAL 2 WHEEL CENTER KICKER WHEEL

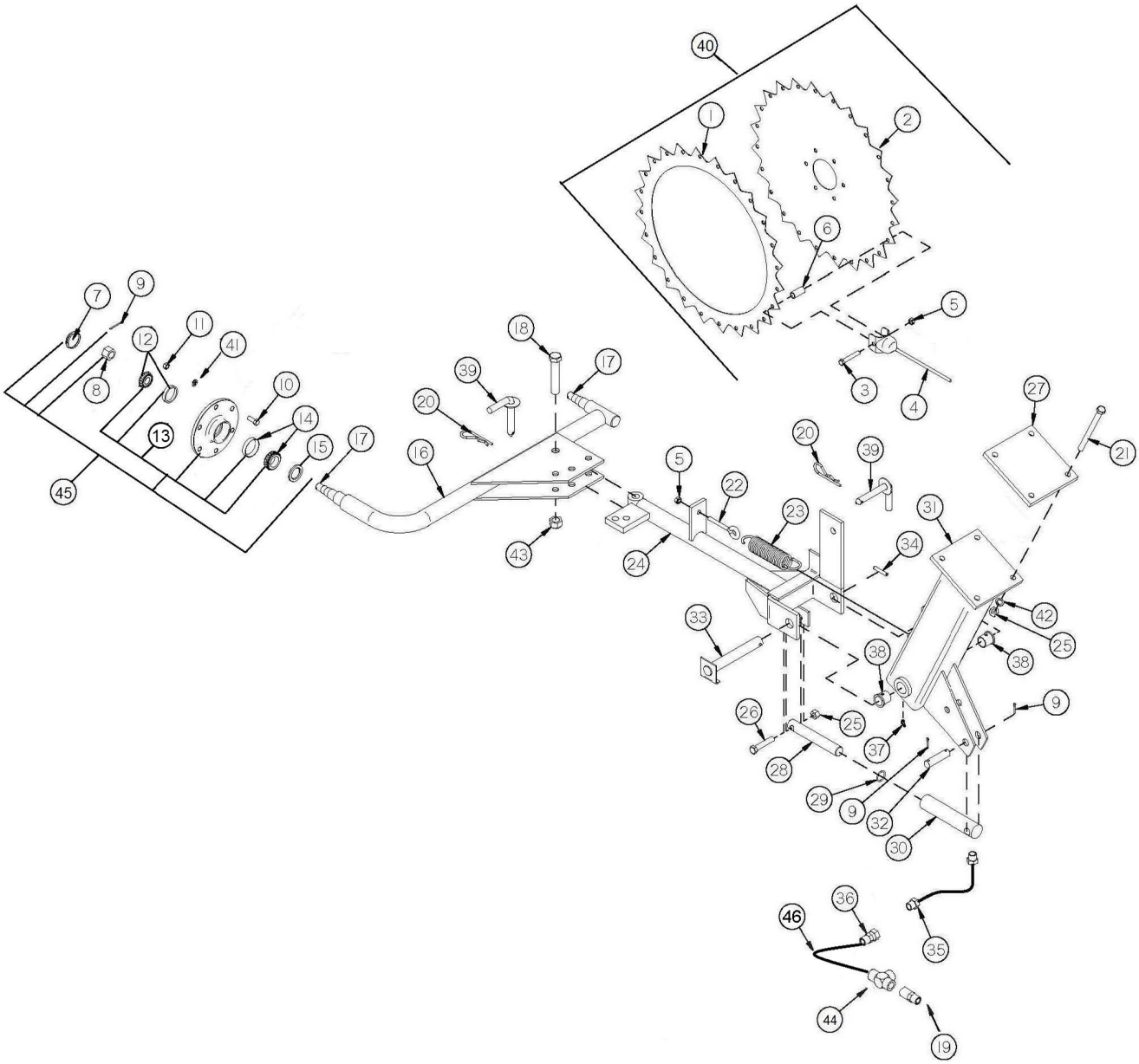

FIGURE 16
OPTIONAL 2 WHEEL CENTER KICKER WHEEL

ITEM	QTY	PART#	DESCRIPTION
1	2	BFR369	RAKE WHEEL RING
2	2	BFR370	RAKE WHEEL CENTER
3	48	YBHH12100	BOLT HEX, 3/8 X 2-1/4, G5, ZC
4	48	T82	RAKE WHEEL TOOTH
5	49	YNTL12005	NUT HEX, TOP LOCK, 3/8
6	48	BFR371	RAKE WHEEL SPACER
7	2	T173	HUB CAP
8	2	YNSL24010	NUT HEX, SLOTTED, 3/4
9	4	YPCT05010	COTTER PIN, 5/32 X 1-1/2
10	12	YBHH76015	BOLT HEX, M10-1.5 X 25
11	12	YNHX76015	NUT HEX, 10MM
12	2	600014	OUTER BEARING AND RACE
13	2	BFR32	RAKE WHEEL HUB
14	2	600012	INNER BEARING AND RACE
15	2	T163	SEAL
16	1	BFR511	CENTER KICKER WHEEL ARM
17	2	BFR36	SPINDLE
18	1	YBHH24050	BOLT HEX, 3/4 X 3 G5
19	1	67148	QUICK COUPLER
20	2	YPHR02010	HAIR PIN
21	4	YBHH16175	BOLT HEX, 1/2 X 6-1/2 G5
22	1	YBTE12025	BOLT, TURNED EYE, 3/8 X 3 FULL THREAD
23	1	BR62	SPRING
24	1	BFR512	CENTER KICKER WHEEL PIVOT
25	5	YNTL16005	NUT HEX, TOP LOCK, 1/2
26	1	YBHH16080	BOLT HEX, 1/2 X 2-1/2 G5
27	1	BFR513	KICKER WHEEL MOUNT
28	1	BFR114	PISTON
29	1	BFR115	O-RING
30	1	BFR116	HYD CYLINDER
31	1	BFR514	KICKER WHEEL OFFSET
32	1	BFR515	CYLINDER PIN
33	1	BFR379	AXLE SHAFT
34	1	YPEX10015	EXPANSION PIN, 5/16 X 1-3/4
35	1	BFR121	HOSE
36	1	58721	ADAPTER, 3/8 MALE WITH .031 ORIFICE
37	1	RG21	GREASE ZERK, 45 DEGREE
38	2	BFR27	BUSHING
39	2	BFR197	LOCKING PIN
40	1	BFR748	COMPLETE WHEEL ASSEMBLY
41	12	YWLO76015	WASHER LOCK, M10
42	4	YWFL16005	WASHER FLAT, 1/2
43	1	YNTL24005	NUT HEX, 3/4
44	1	70212	FITTING
45	1	BFR76	RAKE WHEEL HUB W/BEARINGS
46	1	71813	HYD HOSE, 6 X 66, 6 NPTF, 8 ORB

FIGURE 17
OPTIONAL WIND GUARD

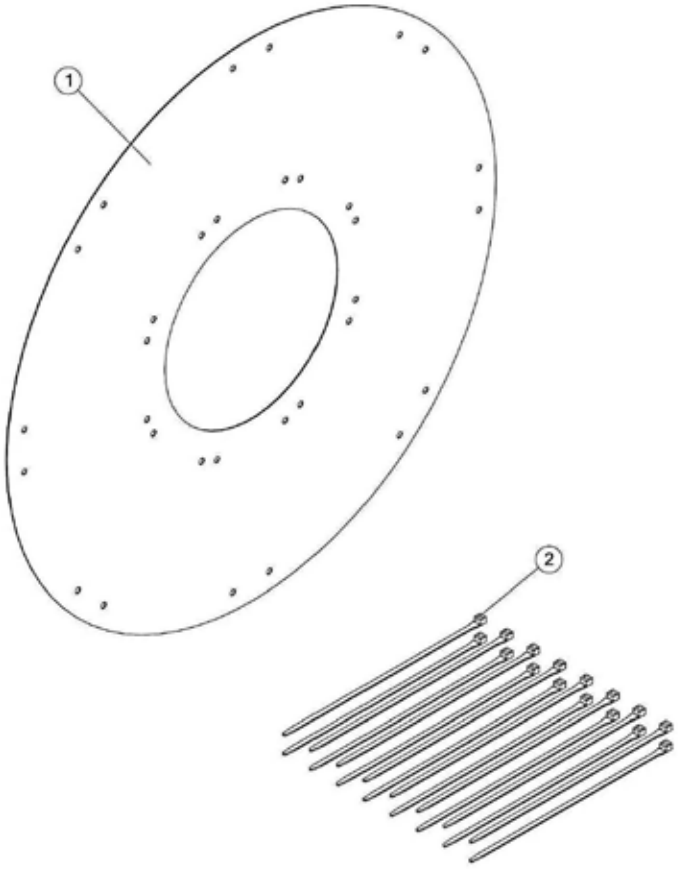

FIGURE 17
OPTIONAL WIND GUARD

ITEM	QTY	PART#	DESCRIPTION
1	1	59040	POLY WIND GUARD 55
2	2	CIZT105	ZIPTIE

FIGURE 18
OPTIONAL RAKE LIGHTS

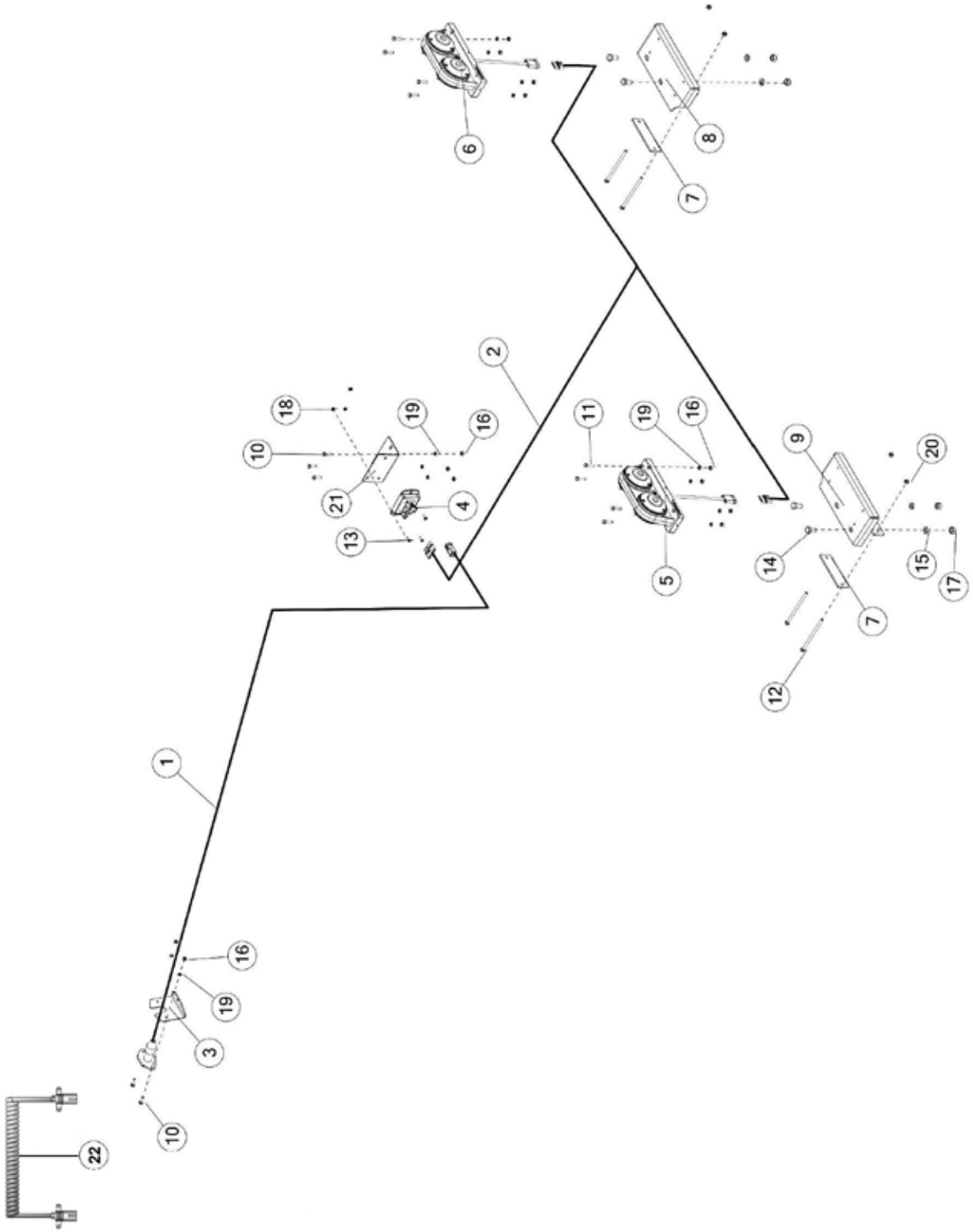

FIGURE 18
OPTIONAL RAKE LIGHTS

ITEM	QTY	PART#	DESCRIPTION
1	1	77858	LIGHT HARNESS
2	1	77847	LIGHT HARNESS REAR
3	1	BFR659	LIGHT BRACKET
4	1	69908	MODULE CONTROL BLINKER
5	1	77923	TAIL LIGHT LH
6	1	77924	TAIL LIGHT RH
7	2	77977	LIGHT BRACKET, PLATE
8	1	77844	LIGHT BRACKET RH
9	1	77846	LIGHT BRACKET LH
10	1	78369	MODULE BRACKET
11	5	YBHH08005	BOLT HEX, 1/4 X 1 G2
12	8	YBHH08030	BOLT HEX, 1/4 X 1-1/4 G2
13	4	YBHH10133	BOLT HEX, 5/16 X 5-1/2 G5
14	4	YBHH16010	BOLT HEX, 1/2 X 1 G5
15	3	YSPN64005	SCREW PAN HEAD #10-24 X 5/8
16	5	YWLO08005	WASHER LOCK, 1/4
17	4	YWLO16005	WASHER LOCK, 1/2
18	5	YNHX08005	NUT HEX, 1/4 G5
19	4	YNHX16005	NUT HEX, 1/2 G2
20	4	YNNY10005	NUT HEX, 5/16 G2
21	3	YNNY64005	NUT HEX, #10-24 G2
22	1	TLCP	TRANSPORT LIGHT CORD

***MEANS NOT SHOWN**

FIGURE 19
TIRE & WHEEL OPTIONAL

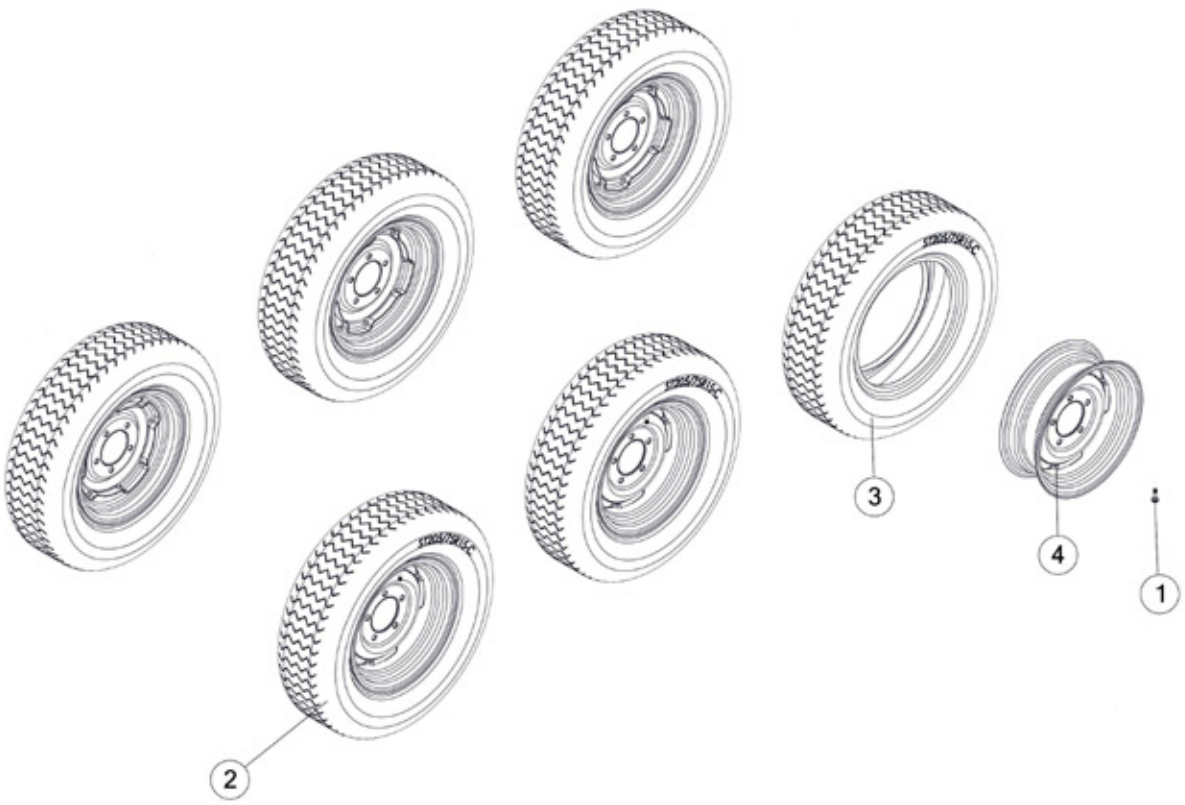

FIGURE 19
TIRE & WHEEL OPTIONAL

ITEM	QTY	PART#	DESCRIPTION
1	6	72436	VALVE STEM, 1-1/2
2	6	75697	205/75R15 TIRE ON AG WHEEL
3	6	75696	ST205/75R15-C RADIAL TIRE
4	6	BFR67	WHEEL 5 X 15 5 BOLT

PARTS NOTES

CHANGE NOTES

H&S MFG. CO.

products approved

for the

FEMA

SEAL OF QUALITY

Manufactured by:

H&S MANUFACTURING CO., INC.

2608 S. HUME AVE. MARSHFIELD, WI 54449

(715) 387-3414 | hsmfgco.com