HC4112

HI-CAPACITY RAKE

PARTS BOOK

Part #75479 HSMFG013023 Rev. #09 Starting Ser. #321HC12026

STRONG HERITAGE - STRONG PEOPLE - STRONGER FUTURE

CONTENTS

Instructions for Ordering Parts - About Improvements 1
Figure 1 - Main Frame Rear 2-3
Figure 2 - Main Frame Pole & Linkage 4-5
Figure 3 - Rake Beams & Arms 6-9
Figure 4 - Gauge Wheel. 10-11
Figure 5 - Rake Hydraulics 12-13
Figure 6 - Hydraulic Lift Cylinder 14-15
Figure 7 - Opening Cylinder. 16-17
Figure 8 - Optional 2 Wheel Center Kicker 18-19
Figure 9 - Optional Light 20-21
Figure 10 - Optional Wind Guard Kit. 22-23
Figure 11 - Optional Tandem Axle 24-25
Figure 12 - Optional Tire & Wheel 26-27
Parts Notes. 28

INSTRUCTIONS FOR ORDERING PARTS

All service parts should be ordered through your authorized H&S dealer. He will be able to give you faster service if you will provide them with the following:

1. Model & Serial Number - Both can be located on the left, rear main frame of your unit.

2. All references to left or right apply to the machine as viewed from the rear.

3. Parts should not be ordered from illustration only. Please order complete part number.

4. If your dealer has to order parts - give shipping instructions:

   VIA truck - large pieces (please specify local truck lines)

   VIA United Parcel Service (include full address)

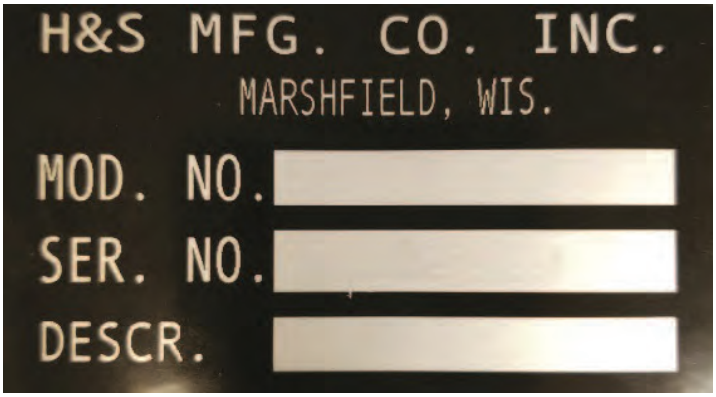

PLEASE RECORD NUMBERS FOR YOUR UNIT FOR QUICK REFERENCE

ABOUT IMPROVEMENTS

H&S IS CONTINUALLY STRIVING TO IMPROVE ITS PRODUCTS

We must, therefore, reserve the right to make improvements or changes whenever it becomes practical to do so, without incurring any obligation to make changes or additions to the equipment previously sold.

FIGURE 1
MAIN FRAME REAR

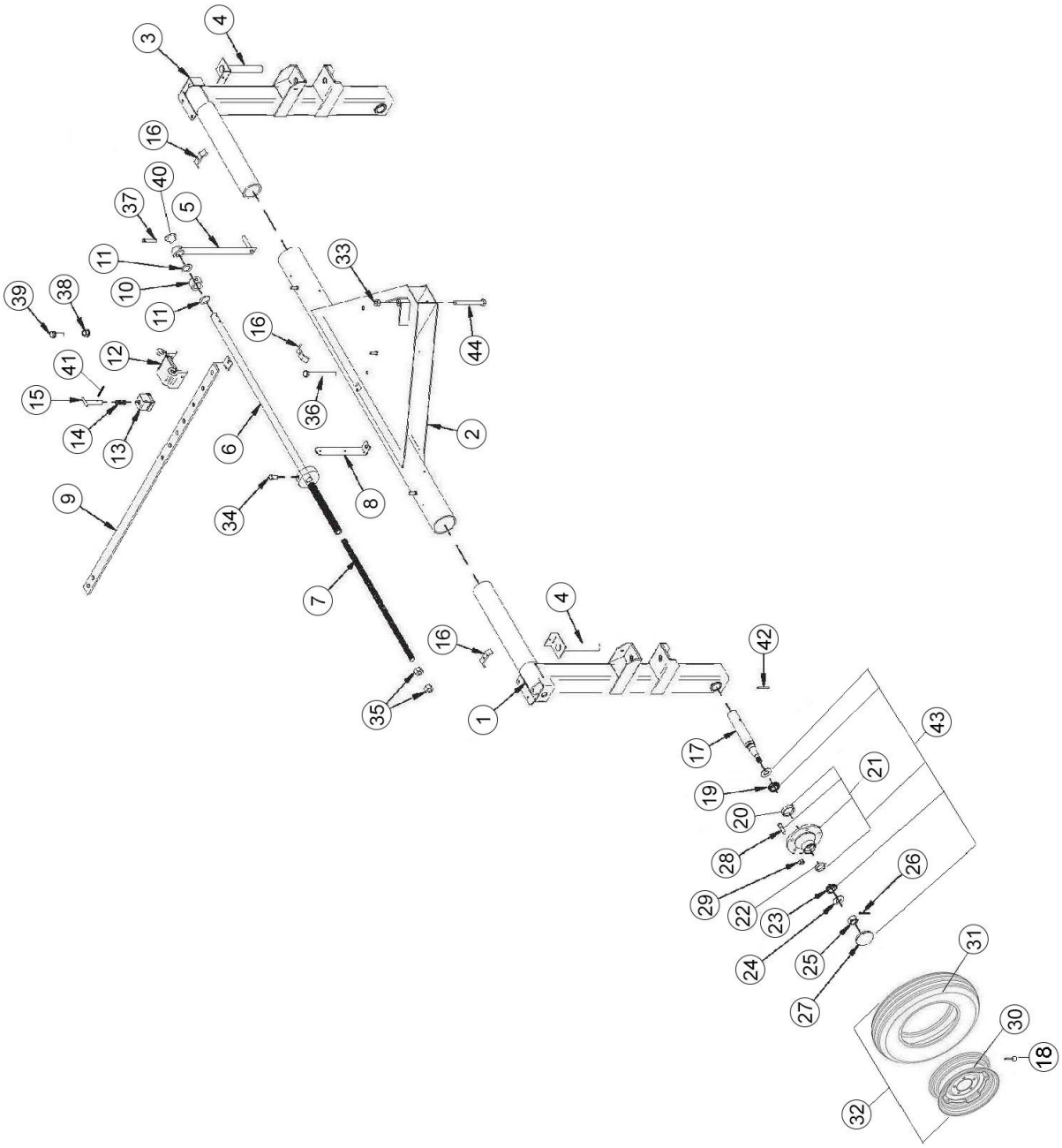

FIGURE 1
MAIN FRAME REAR

ITEM	QTY	PART#	DESCRIPTION
1	1	BFR754	RH AXLE UPRIGHT
2	1	BFR498	PIVOT REAR
3	1	BFR755	LH AXLE UPRIGHT
4	2	BFR756	BEAM PIVOT SHAFT
5	1	BFR423	WIDTH ADJUSTMENT HANDLE
6	1	BFR485	WIDTH ADJUSTMENT TUBE REAR
7	1	BFR420	WIDTH ADJUSTMENT ROD REAR
8	1	BFR649	SMV BRACKET
9	1	BFR611	WIDTH ADJUSTMENT BAR
10	1	BFR422	WIDTH ADJUSTMENT COLLAR
11	2	BFR523	POLY WASHER
12	1	BFR613	WIDTH ADJUSTMENT STOP
13	1	BFR239	SLEEVE ADJUSTABLE LOCK
14	1	BFR240	SPRING
15	1	BFR241	ADJUSTMENT HANDLE
16	2	23N67	HOSE HOLDER
17	2	BFR449	SPINDLE
18	2	72436	VALVE STEM, 1-1/2
19	2	17G145	TAPERED BEARING
20	2	17G146	OUTER RACE
21	2	BFR60	HUB
22	2	BFR61	OUTER RACE
23	2	BFR62	OUTER BEARING
24	2	YWFL24010	WASHER FLAT, 3/4
25	2	YNSL24010	NUT HEX, SLOTTED, 3/4
26	2	YPCT05010	COTTER PIN, 5/32 X 1-1/2
27	2	BFR66	HUB CAP
28	10	YBSD16005	STUD BOLT, 1/2 X 1-7/8
29	10	YNWL16005	WHEEL NUT, 1/2
30	2	BFR67	WHEEL 5 X 15
31	2	BFR128	670 X 15 TIRE 6-PLY
32	2	32006	6.70-15 TIRE ON 5X15 WHEEL
33	1	YNHX20005	NUT HEX, 5/8
34	1	YBHH16010	BOLT HEX, 1/2 X 1 G5
35	2	YNAC24005	NUT HEX, 3/4
36	1	YBHH20085	BOLT HEX, 5/8 X 5 G5
37	1	YBHH12090	BOLT HEX, 3/8 X 2-1/2 G5
38	1	BFR642	WIDTH ADJUSTMENT SPACER
39	1	YSHW10010	HEX WASHER, 5/16
40	1	BFR636	PLASTIC PIPE CAP
41	1	YPCT05020	COTTER PIN, 5/32 X 1-3/4
42	2	YPEX12025	EXPANSION PIN, 3/8 X 2-3/4
43	2	BFR75	COMPLETE GROUND WHEEL HUB
44	1	YBHH20107	BOLT HEX, 5/8 X 7-1/2 G5

FIGURE 2
MAIN FRAME POLE AND LINKAGE

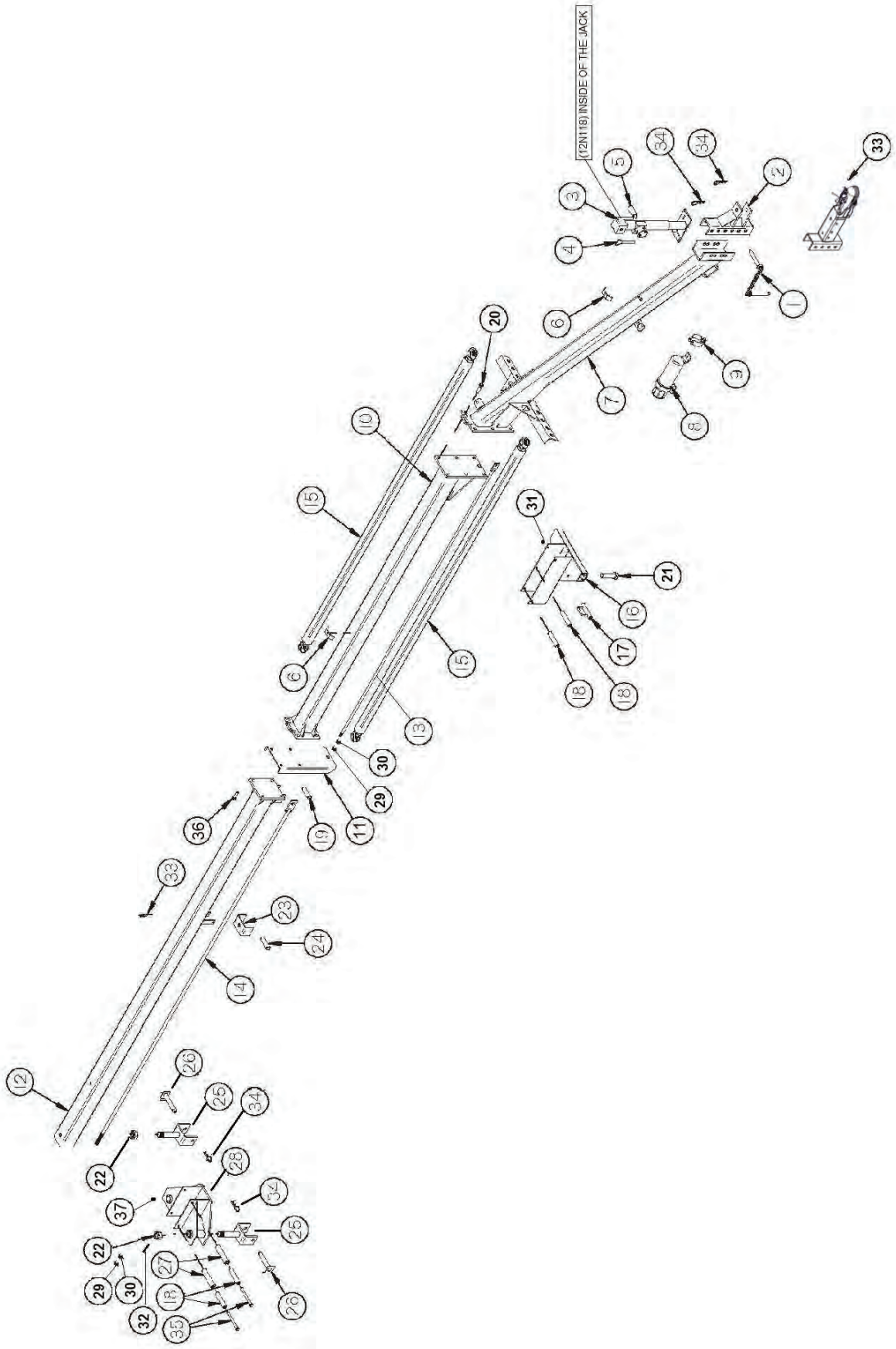

FIGURE 2
MAIN FRAME POLE AND LINKAGE

ITEM	QTY	PART#	DESCRIPTION
1	1	87599	HITCH PIN
2	1	BFR157	HITCH
3	1	BFR753	JACK
4	1	12N117	JACK PIN W/CHAIN
5	1	5N78	JACK HANDLE
*	1	12N118	REPLACEMENT BEARING
6	2	HE42	HOSE HOLDER
7	1	BFR660	POLE
8	1	S522	MANUAL HOLDER
9	1	S523	MANUAL CLAMP - LARGE
10	1	BFR385	CENTER POLE SECTION
11	1	BFR399	LINKAGE STOP
12	1	BFR397	CENTER POLE SECTION BACK
13	1	BFR502	ROD FRONT
14	1	BFR503	ROD BACK
15	2	BFR390	LINKAGE FRONT
16	1	BFR387	LINKAGE SLIDER FRONT
17	1	BFR388	HOSE GUIDE SPACER
18	4	BFR389	SLIDER SPACER
19	1	BFR396	CYLINDER PIN
20	10	YBHH20025	BOLT HEX, 5/8 X 2 G5
21	2	YBHH32010	BOLT HEX, 1 X 3-1/2 G5
22	2	YNSL36005	NUT HEX, SLOTTED, 1-1/4”-12
23	1	BFR402	HOSE GUIDE
24	1	BFR634	CYLINDER PIN
25	2	BFR410	LINKAGE YOKE BACK RH
26	2	BFR413	PIVOT YOKE SHAFT PIN
27	2	BFR404	SLIDER ROLLER BACK
28	1	BFR440	LINKAGE SLIDER BACK
29	3	YNHX24010	NUT HEX, 3/4
30	3	YNSF24006	NUT HEX, SERRATED FLANGE 3/4
31	2	YNHX16005	NUT HEX, 1/2
32	2	YPCT05025	COTTER PIN, 5/32 X 2
33	1	76461	BALL HITCH WLDMNT, 2-5/16 BALL (OPTIONAL)
*	1	78464	HITCH EXTENSION
34	2	YPHR06040	HAIR PIN, 3/16 X 3-3/4
35	2	YBHH16160	BOLT HEX, 1/2 X 5-1/2 G5
36	4	YBHH20035	BOLT HEX, 5/8 X 2-1/2 G5
37	1	G89	STRAIGHT ZERK, 1/4-28 X 90

***MEANS NOT SHOWN**

FIGURE 3
RAKE BEAM AND ARMS

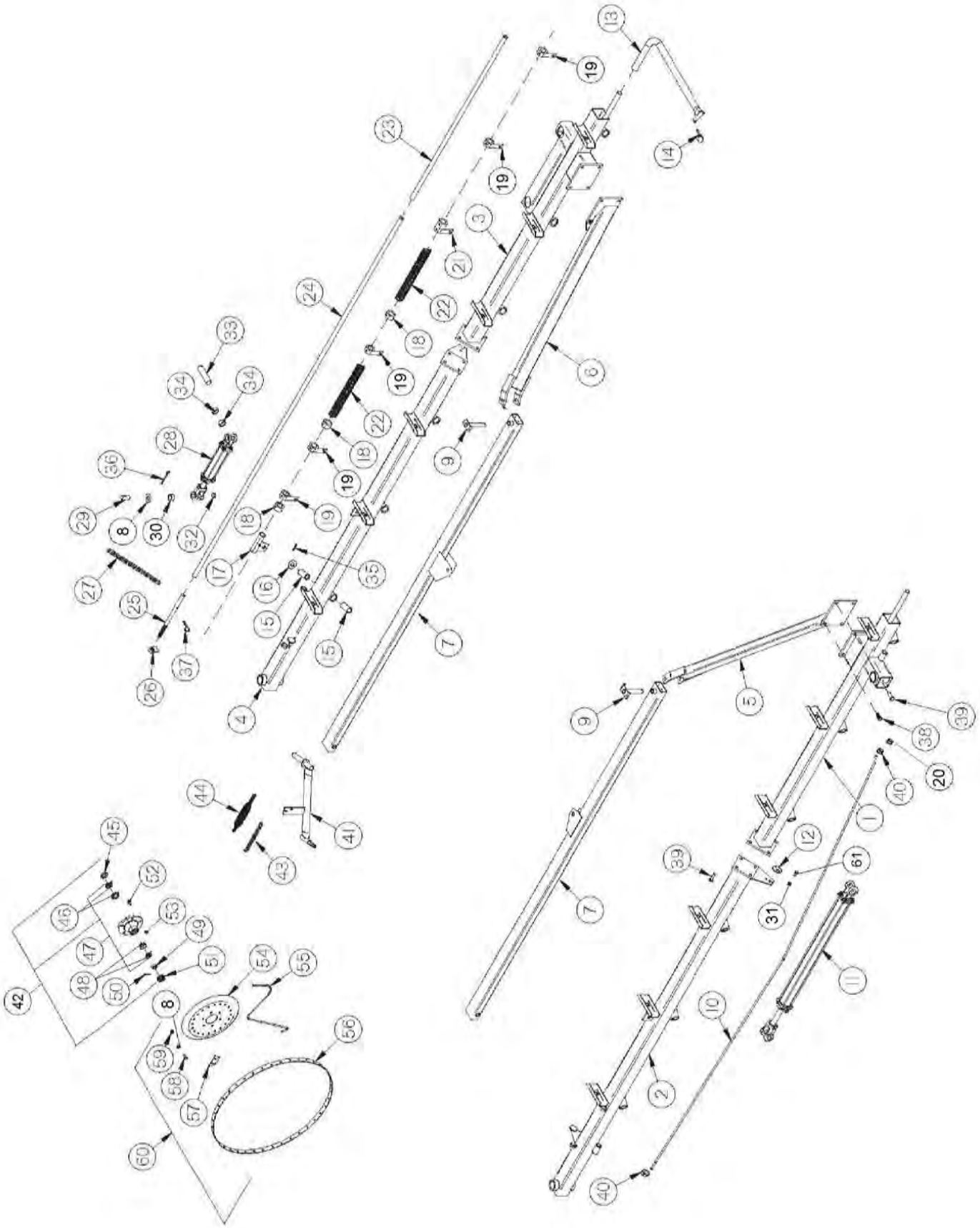

FIGURE 3
RAKE BEAM AND ARMS

ITEM	QTY	PART#	DESCRIPTION
1	1	BFR406	RH RAKE BEAM FRONT
2	1	BFR758	RH BACK RAKE BEAM
3	1	BFR407	LH RAKE BEAM FRONT
4	1	BFR759	LH RAKE BEAM BACK
5	1	BFR391	RH RAKE BEAM ARM
6	1	BFR392	LH RAKE BEAM ARM
7	2	BFR394	RH LINKAGE REAR
8	1	YWLO76015	WASHER LOCK, M10
9	2	BFR393	RAKE BEAM ARM PIN
10	1	BFR612	SIDE ARM STABILIZER ROD
11	1	56004	HYDRAULIC CYLINDER
12	1	DF22	WASHER
13	1	BFR384	LH TRANSPORT LOCK PIPE
*	1	BFR415	RH TRANSPORT LOCK PIPE
14	2	YPLY12010	LYNCH PIN, 3/8 X 1-3/4
15	24	BFR425	RAKE ARM BUSHING W/FLANGE
16	12	BFR229	RAKE ARM WASHER
17	1	BFR428	LH HYDRAULIC CYLINDER END SLIDE
*	1	BFR429	RH HYDRAULIC CYLINDER END SLIDE
18	6	BFR82	PIPE CLAMPS
19	10	BFR622	SPRING BRACKET
20	1	YNJM24012	NUT JAM, 3/4 A
21	2	BFR432	LH LIFTING PIPE CONNECTOR
*	2	BFR433	RH LIFTING PIPE CONNECTOR
22	4	BFR84	COMPRESSION SPRING
23	2	BFR520	LIFTING PIPE FRONT
24	2	BFR519	LIFTING PIPE BACK
25	2	BFR427	RAKE ARM LOCK-UP SHAFT
26	2	BFR426	RAKE PRESSURE HANDLE
27	2	BFR111	RAKE ARM ADJUSTMENT CHAIN BACK
28	2	55999	HYDRAULIC LIFT CYLINDER
29	2	BFR517	PIN
30	2	16SV136	WASHER
31	2	K106	CYLINDER SPACER

***MEANS NOT SHOWN**

FIGURE 3
RAKE BEAM AND ARMS

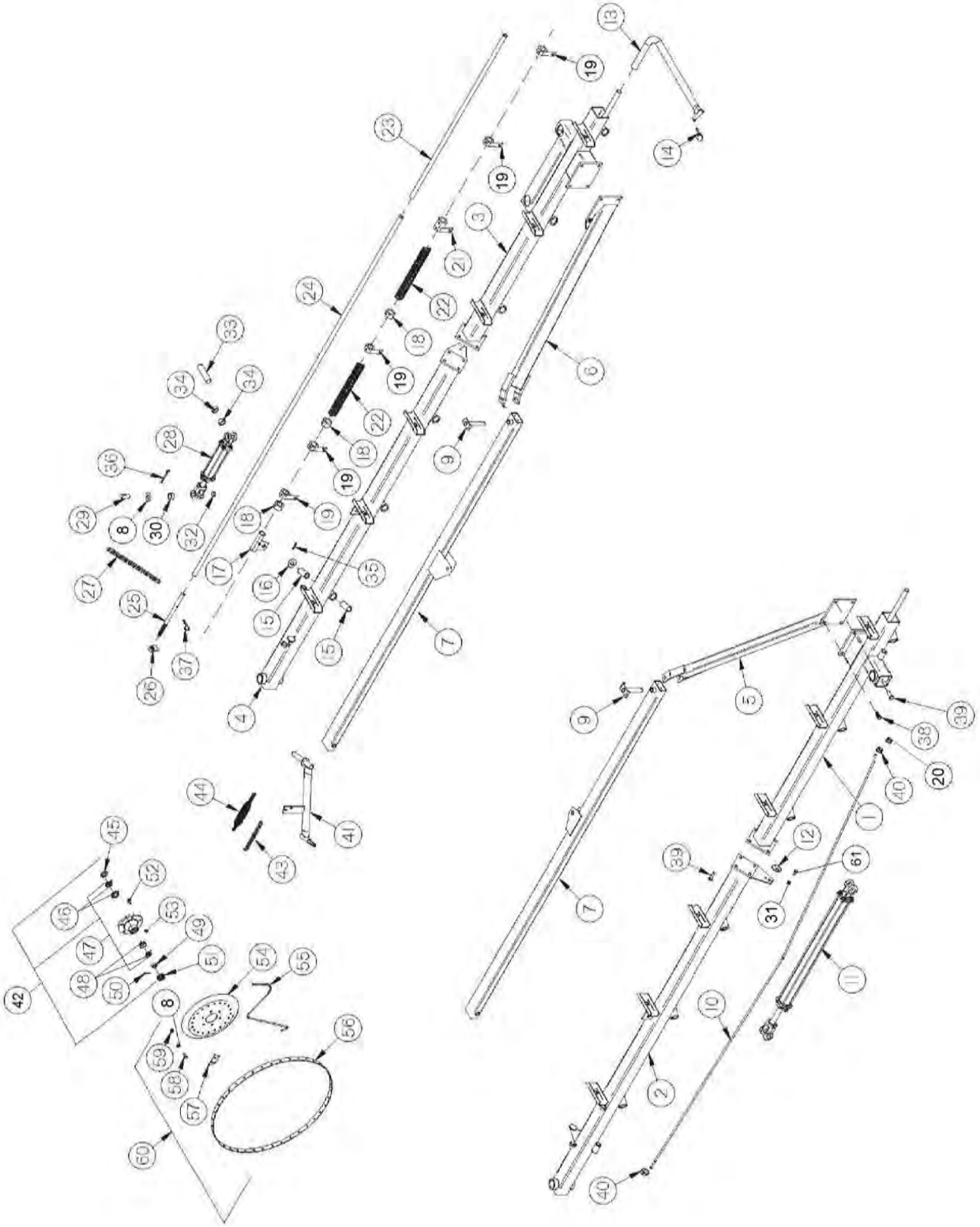

FIGURE 3
RAKE BEAM AND ARMS

ITEM	QTY	PART#	DESCRIPTION
32	2	BFR506	NYLON WEAR BLOCK
33	2	T143	CYLINDER PIN
34	4	X94	CYLINDER SPACERS EXPANSION
35	1	YPEX10015	COTTER PIN, 5/16 X 1-3/4
36	2	YPCT07005	COTTER PIN, 7/32 X 2
37	2	YPHR08040	HAIR PIN, 1/4 X 5
38	4	YBHH20020	BOLT HEX, 5/8 X 1-3/4 G5
39	4	YBHH20025	BOLT HEX, 5/8 X 2 G6
40	2	YNFG24005	NUT HEX, FLANGED-LOCK, 3/4
41	12	BFR436	RAKE ARM LH
*	12	BFR437	RAKE ARM RH
42	12	1081	RAKE WHEEL HUB AND SPINDLE
43	12	BFR140	RAKE ARM ADJUSTMENT CHAIN
44	12	BFR138	RAKE ARM SPRING
45	12	T163	SEAL
46	12	600012	INNER BEARING AND RACE
47	12	BFR32	RAKE WHEEL HUB
48	12	600012	INNER BEARING AND RACE
49	12	YNSL24010	NUT HEX, SLOTTED, 3/4
50	12	YPCT05010	COTTER PIN, 5/32 X 1-1/2
51	12	T173	HUB CAP
52	60	YBHH76005	BOLT HEX, 10MM X 25MM
53	60	YNHX76015	HEX NUT, 10MM
54	12	T179	RAKE WHEEL CENTER
55	480	T176	RAKE WHEEL TOOTH
56	12	T177	OUTER RING
57	10	T178	RAKE TOOTH CLIP
58	20	YBCR76005	BOLT CARRIAGE, 10MM X 25MM 10MM
59	20	YNHX76015	TOP LOCK NUT
60	12	T174	RAKE WHEEL LH
*	12	BFR31	RAKE WHEEL RH
61	8	YBHH10010	BOLT HEX, 5/16 X 1 G5

***MEANS NOT SHOWN**

FIGURE 4
GAUGE WHEEL

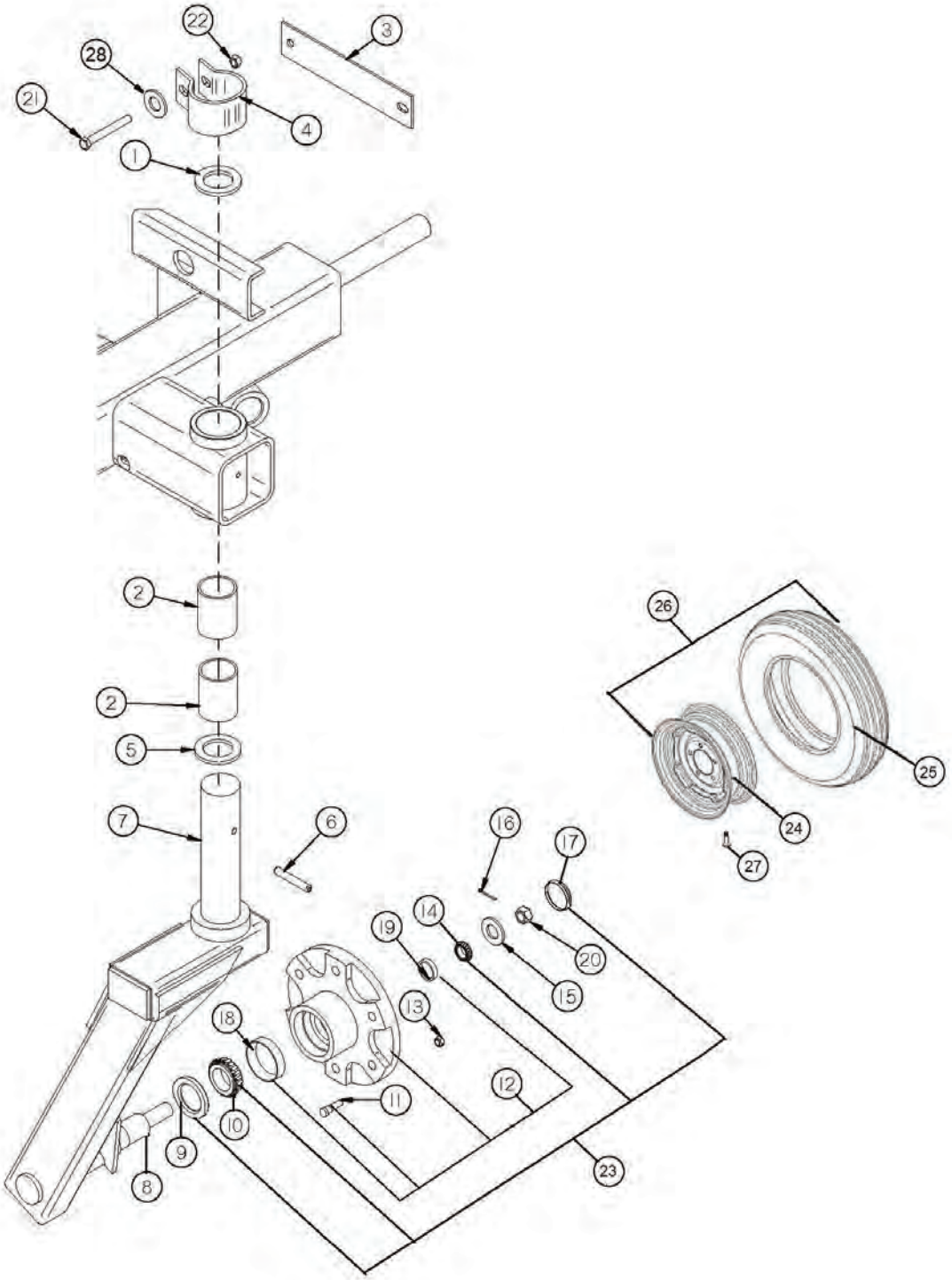

FIGURE 4
GAUGE WHEEL

ITEM	QTY	PART#	DESCRIPTION
1	1	BFR309	GAUGE WHEEL WASHER
2	2	RG26	BUSHING, BRONZE, GAUGE WHEEL
3	1	BFR310	BRAKE PAD (2)
4	1	BFR311	BRAKE COLLAR
5	1	RG24	BRONZE WASHER
6	1	YPEX10025	EXPANSION PIN, 5/16 X 2-3/4
7	1	BFR312	RH COMPLETE FORK
*	1	BFR316	LH COMPLETE FORK
8	1	BFR56	SPINDLE
9	1	BFR57	GREASE SEAL
10	1	17G145	TAPERED ROLLER BEARING, 1.249 BORE
11	5	YBSD16005	STUD BOLT, 1/2 X 1-7/8 (3/8 SHOULDER)
12	1	BFR60	HUB W/RACES
13	5	YNWL16005	WHEEL NUT, 1/2
14	1	BFR62	OUTER BEARING
15	1	YWFL24010	WASHER FLAT, 3/4
16	1	YPCT05010	COTTER PIN, 5/32 X 1-1/2
17	1	BFR66	HUB CAP
18	1	17G146	OUTER RACE
19	1	BFR61	OUTER RACE
20	1	YNSL24010	NUT HEX, SLOTTED, 3/4
21	1	YBHH12125	BOLT HEX, 3/8 X 3 G5
22	1	YNFG12006	NUT FLANGE, 3/8 GF
23	1	BFR75	COMPLETE HUB GROUND WHEEL
24	1	BFR67	WHEEL 5 X 15
25	1	BFR128	6.70 X 15 TIRE
26	1	32006	6.70-15 TIRE ON 5X15 WHEEL
27	1	72436	VALVE STEM, 1-1/2
28	1	YWFL12005	WASHER LOCK, 3/8

***MEANS NOT SHOWN**

FIGURE 5
RAKE HYDRAULICS

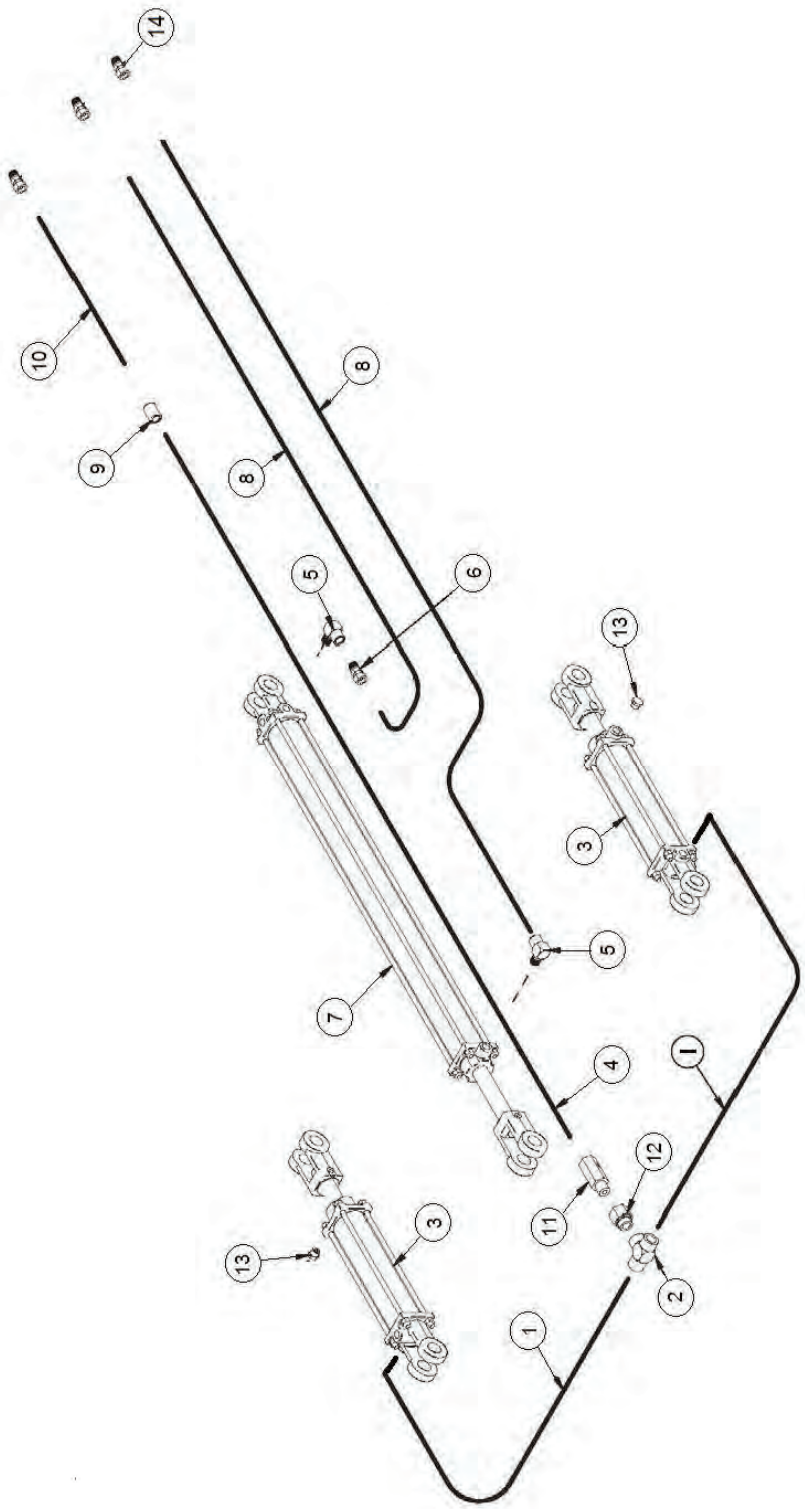

FIGURE 5
RAKE HYDRAULICS

ITEM	QTY	PART#	DESCRIPTION
1	2	37N60	HOSE, 108
2	1	BFR74	FEMALE TEE, 3/8
3	2	55999	HYDRAULIC LIFT CYLINDER
4	1	23N302	HOSE, 264
5	2	23N234	STREET ELBOW, 3/8
6	1	58723	MALE ADAPTER UNION W/ ORIFICE
7	1	56004	HYDRAULIC OPEN CYLINDER
8	2	BFR621	HOSE, 256
9	1	HE60	PIPE COUPLER, 3/8
10	1	BFR448	HOSE, 66
11	1	BFR554	FLOW VALVE
12	1	BFR555	ADAPTER
13	2	BFR70	VENT PLUG
14	3	DWM205	COUPLERS

FIGURE 6
HYDRAULIC LIFT CYLINDER

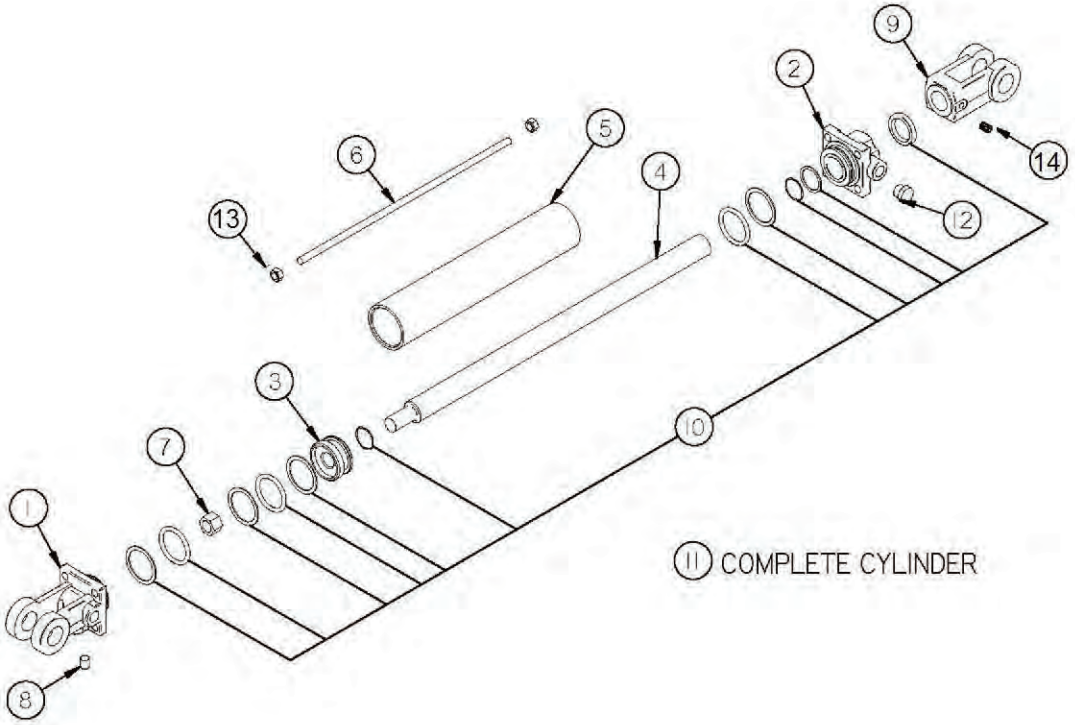

FIGURE 6
HYDRAULIC LIFT CYLINDER

ITEM	QTY	PART#	DESCRIPTION
1	1	23N142A	CLEVIS CAP
2	1	56174	ROD CAP
3	1	56180	PISTON
4	1	T184A	ROD
5	1	BFR68	CYLINDER TUBE
6	4	T186	TIE ROD
7	1	23N148	PISTON NUT
8	1	23N149	PLUG
9	1	23N150A	ROD CLEVIS
10	1	56187	SEAL KIT
11	1	55999	COMPLETE CYLINDER
12	1	BFR70	VENT PLUG
13	8	YNHX12006	NUT HEX, 3/8 G2
14	1	YSSO12015	SCREW SET, SOCKET, 3/8 X 3/8

FIGURE 7
OPENING CYLINDER

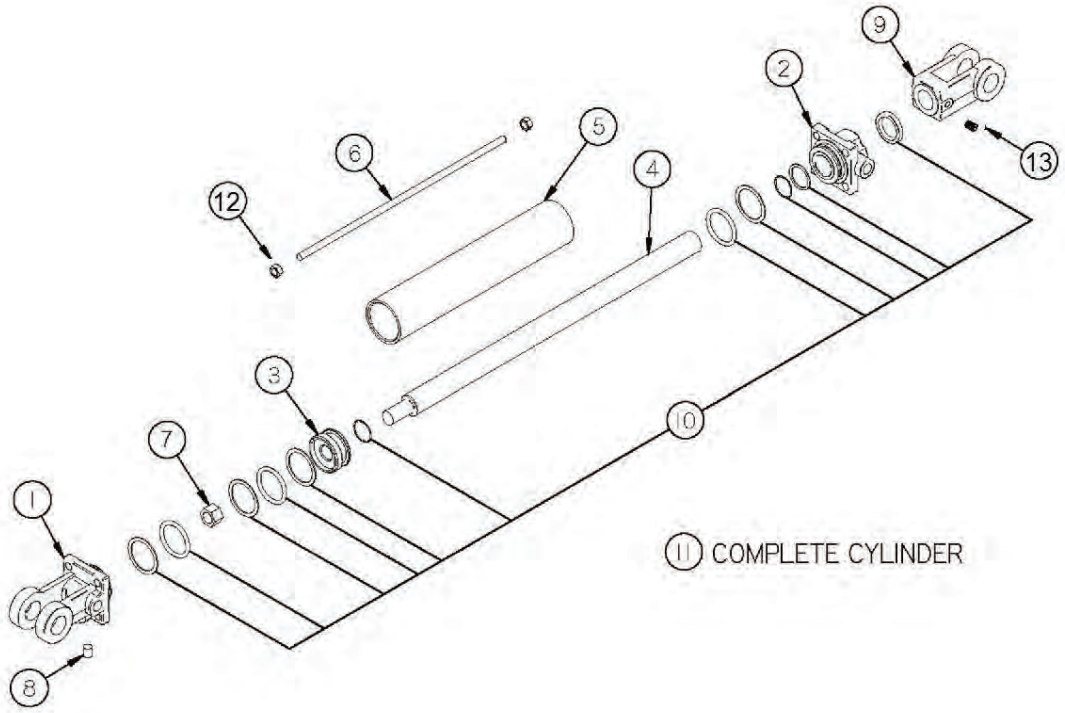

FIGURE 7
OPENING CYLINDER

ITEM	QTY	PART#	DESCRIPTION
1	1	23N142A	CLEVIS CAP
2	1	56174	ROD CAP
3	1	56180	PISTON
4	1	BFR654	ROD
5	1	BFR655	CYLINDER TUBE
6	4	BFR656	TIE ROD
7	1	23N148	PISTON NUT
8	1	23N149	PLUG
9	1	23N150A	ROD CLEVIS
10	1	56187	SEAL KIT
11	1	56004	COMPLETE CYLINDER
12	8	YNHX12006	NUT HEX, 3/8 G2
13	1	YSSO12015	SCREW SET, SOCKET, 3/8 X 3/8

FIGURE 8
OPTIONAL 2 WHEEL CENTER KICKER WHEEL

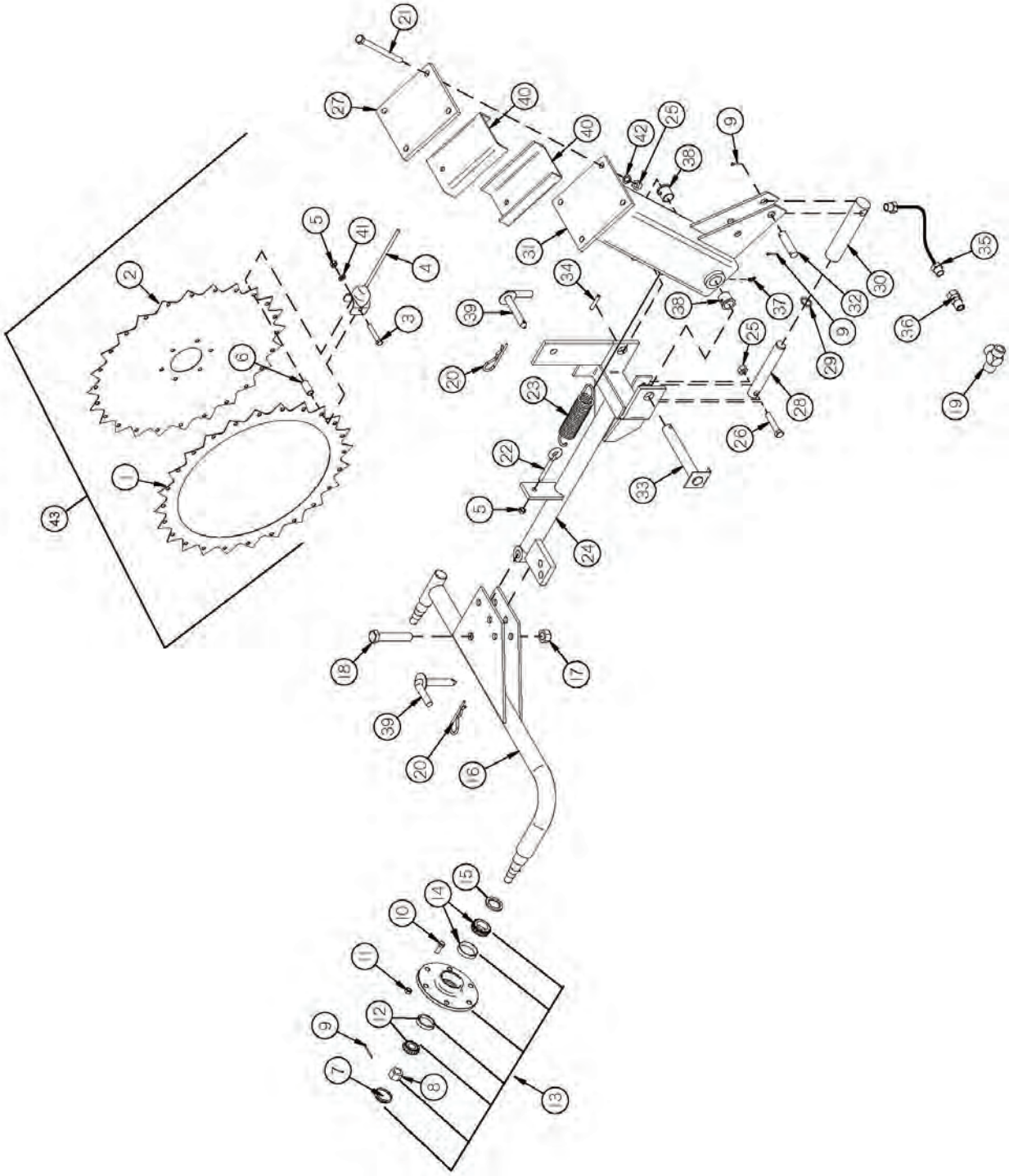

FIGURE 8
OPTIONAL 2 WHEEL CENTER KICKER WHEEL

ITEM	QTY	PART#	DESCRIPTION
1	1	BFR369	RAKE WHEEL RING
2	1	BFR370	RAKE WHEEL CENTER
3	1	YBHH12100	BOLT HEX, 3/8 X 2-1/4 G5
4	1	T82	RAKE WHEEL TOOTH
5	2	YNTL12005	NUT HEX, TOP LOCK, 3/8
6	1	BFR371	RAKE WHEEL SPACER
7	1	T173	HUB CAP
8	1	YNSL24010	NUT HEX, SLOTTED, 3/4
9	1	YPCT05010	COTTER PIN, 5/32 X 1-1/2
10	1	YBHH76005	BOLT HEX, 10MM X 25MM
11	1	YNHX76015	NUT HEX, 10MM
12	1	600014	OUTER BEARING RACE
13	1	1081	RAKE WHEEL HUB AND SPINDLE
14	1	600012	INNER BEARING RACE
15	1	T163	SEAL
16	1	BFR511	CENTER KICKER WHEEL ARM
17	1	YNTL24005	NUT HEX, TOP LOCK, 3/4
18	1	YBHH24050	BOLT HEX, 3/4 X 3 G5
19	1	BFR74	PIPE TEE, 3/8
20	2	YPHR02010	HAIR PIN, #21-07
21	4	YBHH16175	BOLT HEX, 1/2 X 6-1/2 G5
22	1	YBTE12025	BOLT TURNED EYE, 3/8 X 3
23	1	BR62	SPRING
24	1	BFR512	CENTER KICKER WHEEL PIVOT
25	6	YNTL16005	NUT HEX, TOP LOCK, 1/2
26	1	YBHH16080	BOLT HEX, 1/2 X 2-1/2 G5
27	1	BFR513	KICKER WHEEL MOUNT
28	1	BFR114	PISTON
29	1	BFR115	O-RING
30	1	BFR116	HYDRAULIC CYLINDER
31	1	BFR514	KICKER WHEEL OFFSET
32	1	BFR515	CYLINDER PIN
33	1	BFR379	AXLE SHAFT
34	1	YPEX10015	EXPANSION PIN, 5/16 X 1-3/4
35	1	BFR121	HOSE
36	1	58720	3/8 MALE ADPTER WITH .022 ORIFICE
37	1	RG21	GREASE ZERK, 45 DEGREE
38	2	BFR27	BUSHING
39	1	BFR197	LOCKING PIN
40	2	BFR516	FILLER PLATE
41	4	YWLO12005	WASHER LOCK, 3/8
42	4	YWLO16005	WASHER LOCK, 1/2
43	1	BFR748	COMPLETE WHEEL ASSEMBLY

FIGURE 9
OPTIONAL LIGHTS

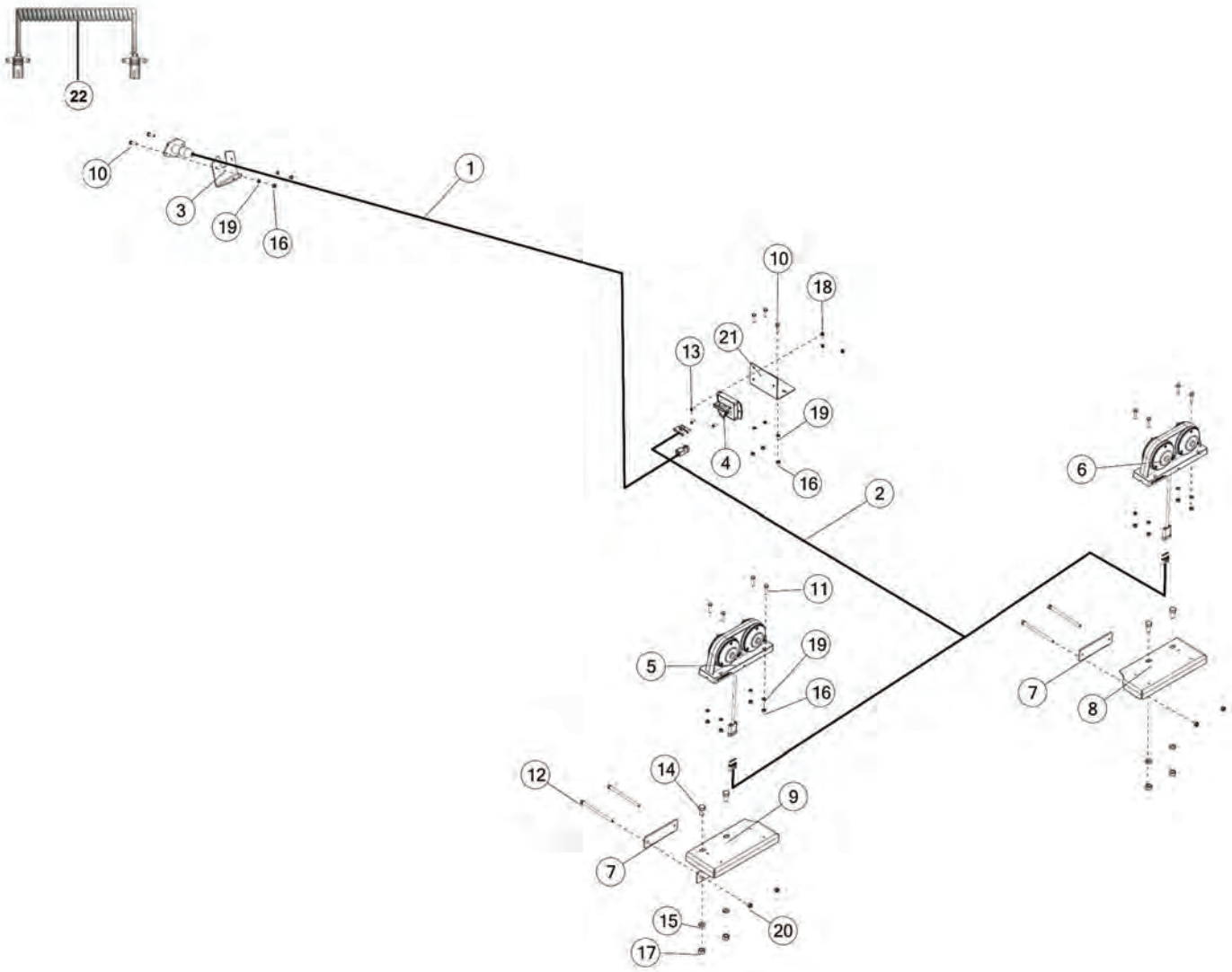

FIGURE 9
OPTIONAL LIGHTS

ITEM	QTY	PART#	DESCRIPTION
1	1	BFR668	LIGHT HARNESS
2	1	77847	ELEC HARNESS, LIGHT REAR
3	1	BFR659	LIGHT BRACKET
4	1	69908	MODULE CONTROL BLINKER
5	1	77923	LH TAIL LIGHT
6	1	77924	RH TAIL LIGHT
7	2	77977	LIGHT BRACKET, PLATE
8	1	77844	RH LIGHT BRACKET
9	1	77846	LH LIGHT BRACKET
10	2	YBHH08005	BOLT HEX 1/4 X 1 G2
11	8	YBHH08030	BOLT HEX 1/4 X 1-1/4 G2
12	4	YBHH10133	BOLT HEX 5/16 X 5-1/2 G5
13	3	YSPN64005	SCREW PAN HEAD #10-24 X 5/8
14	4	YBHH16010	BOLT HEX 1/2 X 1 G5
15	4	YWLO16005	WASHER LOCK, 1/2
16	13	YNHX08005	NUT HEX, 1/4 G5
17	4	YNHX16005	NUT HEX, 1/2 G2
18	3	YNNY64005	NUT HEX, #10-24 G2
19	13	YWLO08005	WASHER LOCK, 1/4
20	4	YNNY10005	NUT HEX, 5/16 G2
21	1	78369	MODULE BRACKET
22	1	TLPC	TRANSPORT LIGHT CORD

FIGURE 10
OPTIONAL WIND GUARD KIT

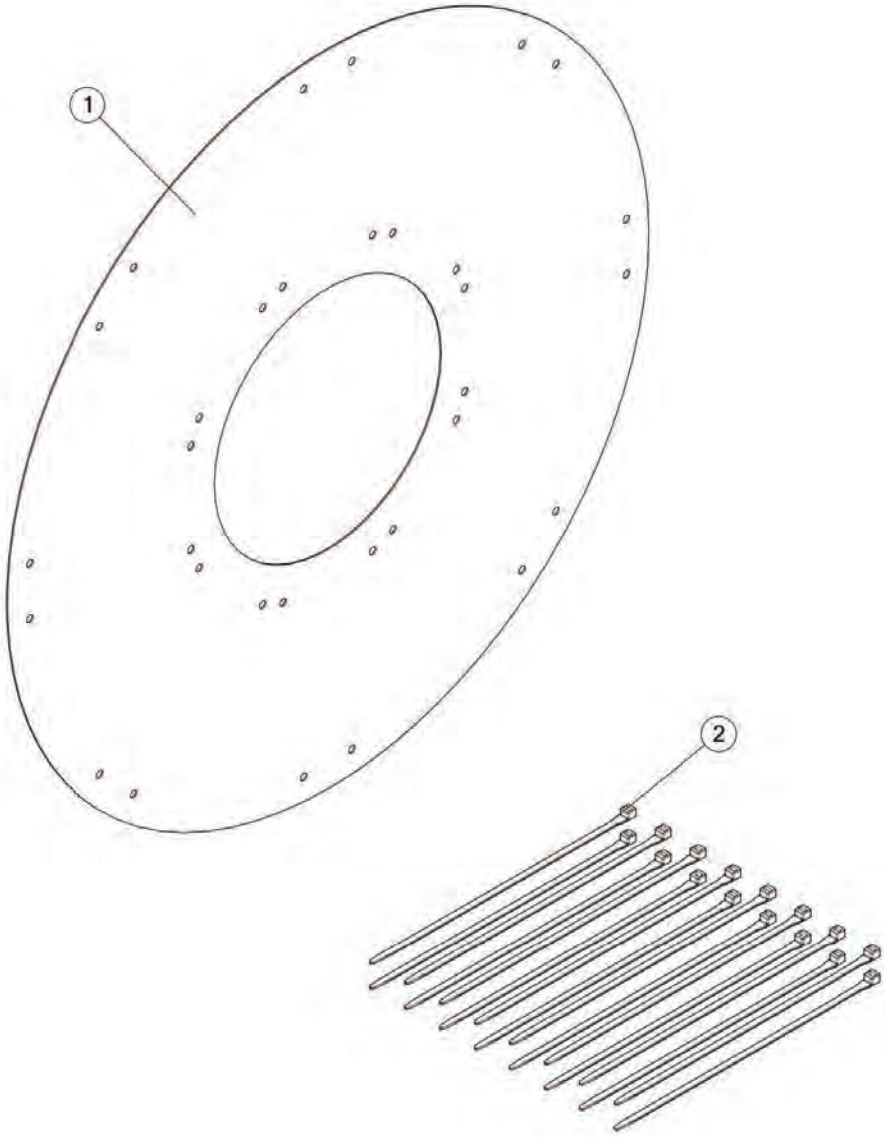

FIGURE 10
OPTIONAL WIND GUARD KIT

ITEM	QTY	PART#	DESCRIPTION
1	1	59040	POLY WIND GUARD, 55 RAKE WHEEL
2	16	CIZT105	ZIPTIE, 15.0 X .30 X .08

FIGURE 11
OPTIONAL TANDEM AXLE

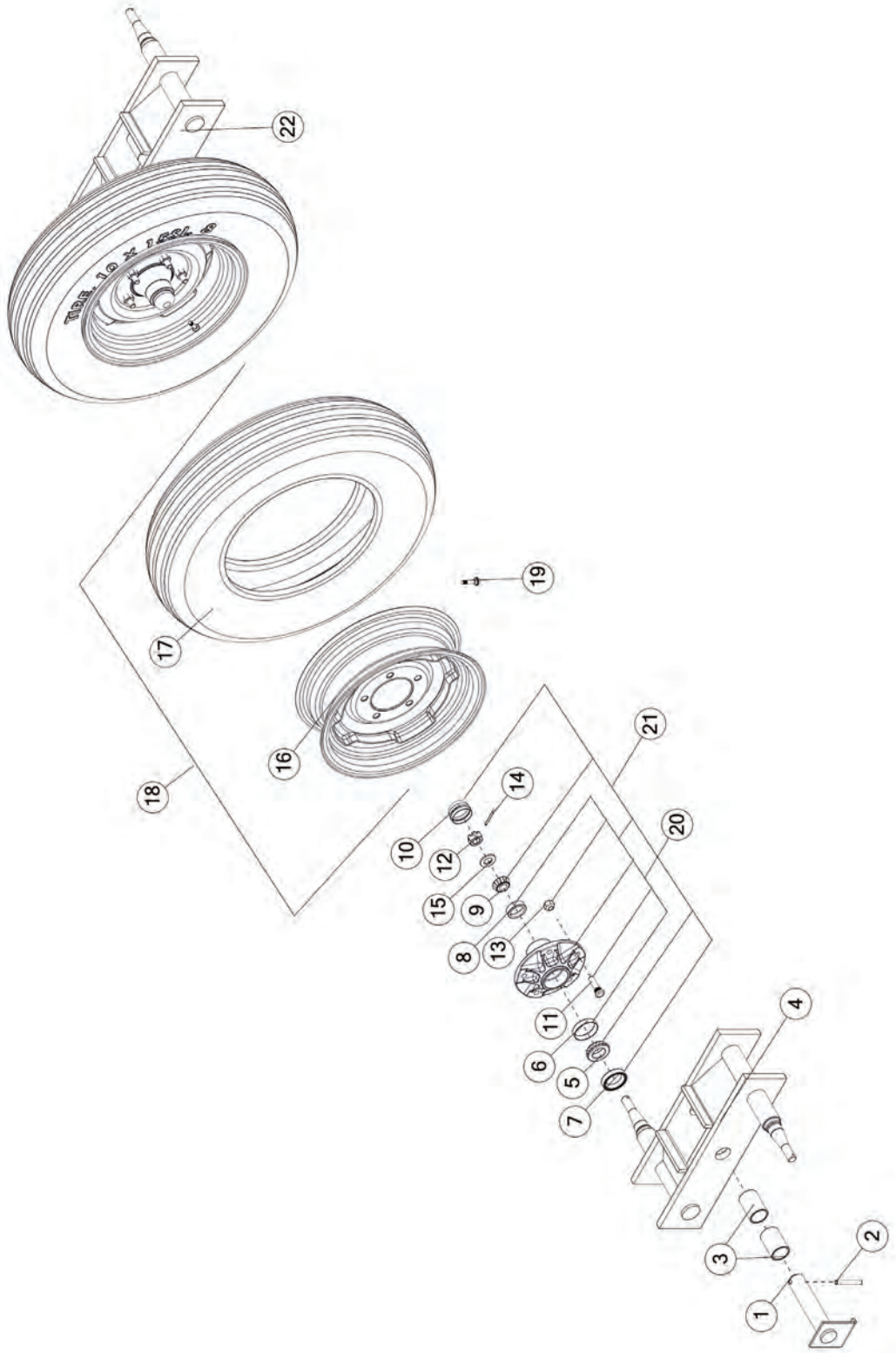

FIGURE 11
OPTIONAL TANDEM AXLE

ITEM	QTY	PART#	DESCRIPTION
1	2	BFR524	TANDEM PIN
2	2	YPEX12025	EXPANSION PIN, 3/8 X 2-3/4
3	4	BFR625	BRONZE BUSHING
4	1	BFR509	RH TANDEM AXLE
5	2	17G145	TAPERED ROLLER BEARING, 1.249 BORE
6	2	17G146	OUTER RACE
7	2	BFR57	GREASE SEAL
8	2	BFR61	OUTER RACE
9	2	BFR62	OUTER BEARING
10	2	BFR66	HUB CAP
11	10	YBSD16005	BOLT STUD, 1/2 X 1-7/8 X 3/8 G5
12	2	YNSL24010	NUT SLOT, 3/4
13	10	YNWL16005	NUT WHEEL, 1/2 G5
14	2	YPCT05010	COTTER PIN 5/32 X 1-1/2
15	2	YWFL24010	WASHER FLAT, 3/4
16	2	BFR67	WHEEL 5 X 15 5 BOLT
17	2	BFR128	670 X 15 TIRE 6-PLY
*	2	75696	ST205/75R15-C RADIAL TIRE (OPTIONAL)
18	2	32006	6.70-15 TIRE ON 5X15 WHEEL
*	2	75697	205/75R15 TIRE ON AG WHEEL (OPTIONAL)
19	2	72436	VALVE STEM, 1-1/2 RUBBER
20	2	BFR60	HUB WITH RACES & STUDS
21	2	BFR75	HUB ASSY
22	1	BFR510	LH TANDEM AXLE

***MEANS NOT SHOWN**

FIGURE 12
OPTIONAL TIRE & WHEEL

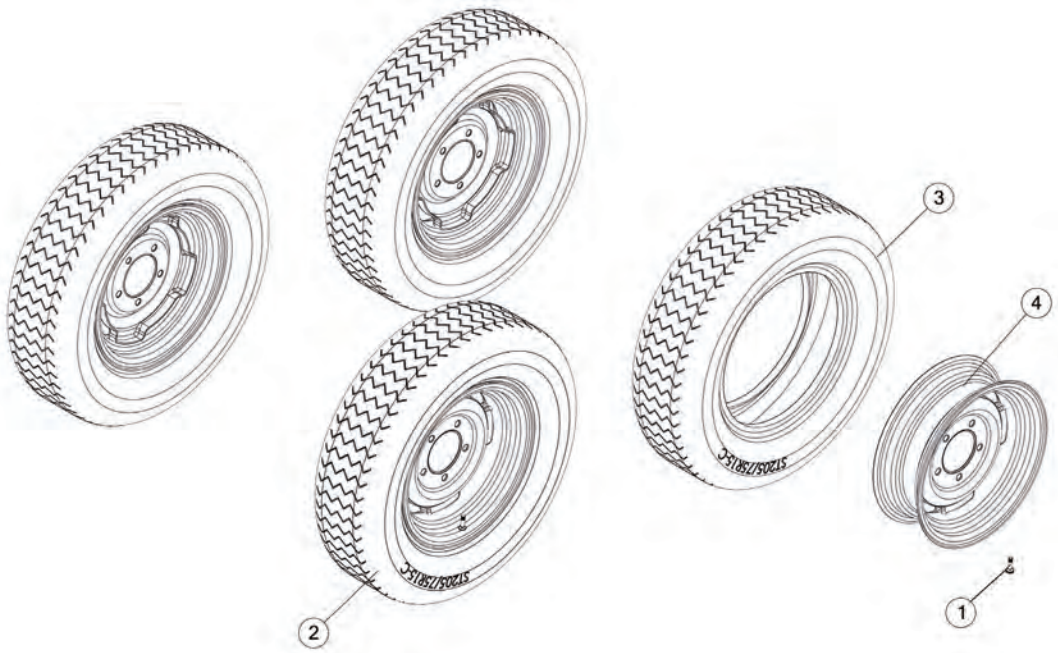

FIGURE 12
OPTIONAL TIRE & WHEEL

ITEM	QTY	PART#	DESCRIPTION
1	4	72436	VALVE STEM, 1-1/2 RUBBER
2	4	75697	ST205-75R15C ON 15X5, 5-BOLT
3	4	75696	ST205/75R15-C RADIAL TIRE
4	4	BFR67	WHEEL 5X15 5 BOLT CREAM COLOR

PARTS NOTES

PARTS NOTES

H&S MFG. CO.

products approved

for the

FEMA

SEAL OF QUALITY

Manufactured by:
H&S MANUFACTURING CO., INC.
2608 S. HUME AVE. MARSHFIELD, WI 54449
(715) 387-3414 | hsmfgco.com