HC4112
RAKE

PARTS BOOK

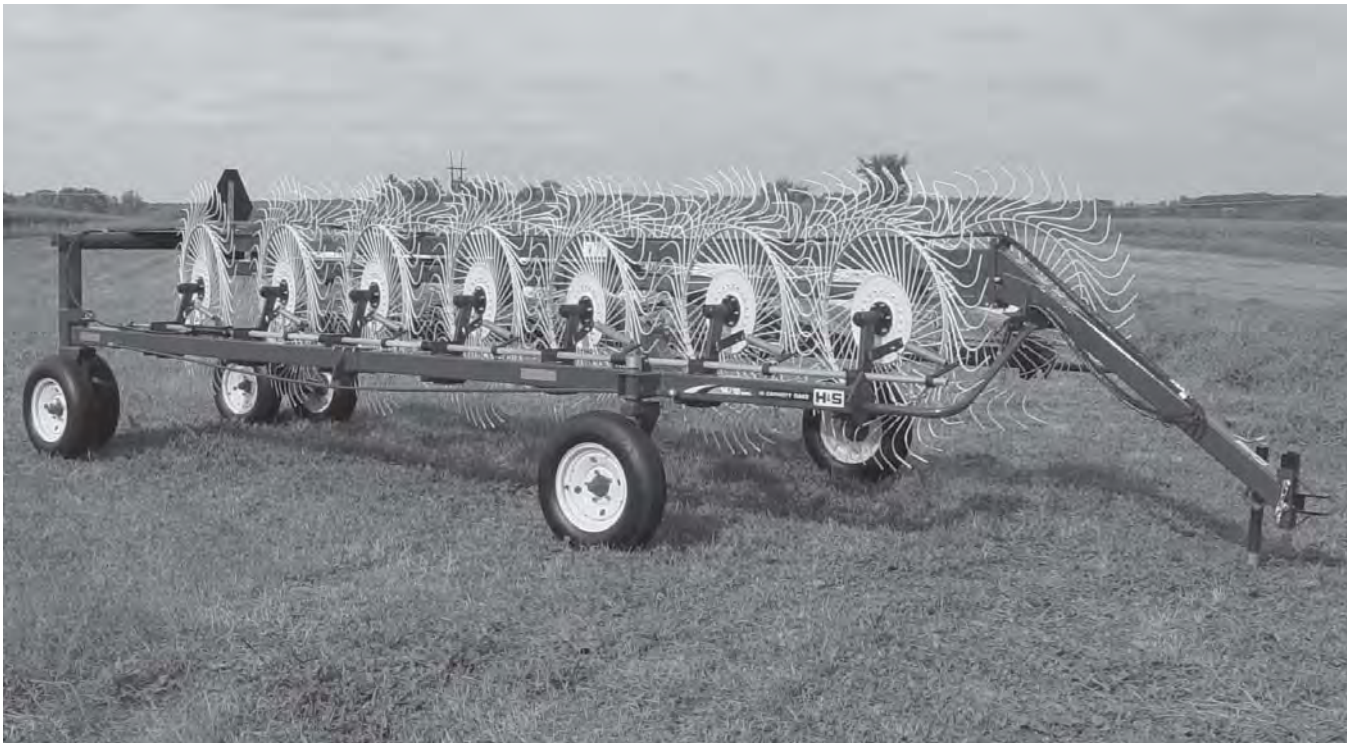

Revision **#03**
Starting Ser.**#716140**

Part #75479
HSMFG0517

Manufactured By

H&S MANUFACTURING CO.,INC.

P.O. BOX 768 (715) 387-3414 FAX (715) 384-5463
MARSHFIELD, WISCONSIN 54449

CONTENTS

Instructions for Ordering Parts 1
Figure 1 - Main Frame Rear 2-3
Figure 2 - Main Frame Pole & Linkage 4-5
Figure 3 - Rake Beams & Arms 6-9
Figure 4 - Gauge Wheel 10-11
Figure 5 - Rake Hydraulics 12-13
Figure 6 - Hydraulic Lift Cylinder 14
Figure 7 - Opening Cylinder 15
Figure 8 - Optional 2 Wheel Center Kicker 16-17
Figure 9 - Optional 3 Wheel Center Kicker 18-19
Figure 10 - Optional Lights 20
Figure 11 - Optional Wind Guard Kit. 21-22
Figure 12 - Optional Tandem Axle 23-24
Figure 13 - Optional Tire & Wheel 25-26
NOTES 27

INSTRUCTIONS FOR ORDERING PARTS

All service parts should be ordered through your authorized H&S dealer. They will be able to give you faster service if you will provide them with the following

1. Model & Serial number is located on the left, rear main frame of your unit.
2. All reference to left or right apply to the machine as viewed from the rear.
3. Parts should not be ordered from illustration only. Please order by complete part number.
4. If your dealer has to order parts - give shipping instructions:

   VIA truck - large pieces (please specify local truck lines)

   VIA United Parcel Service (include full address)

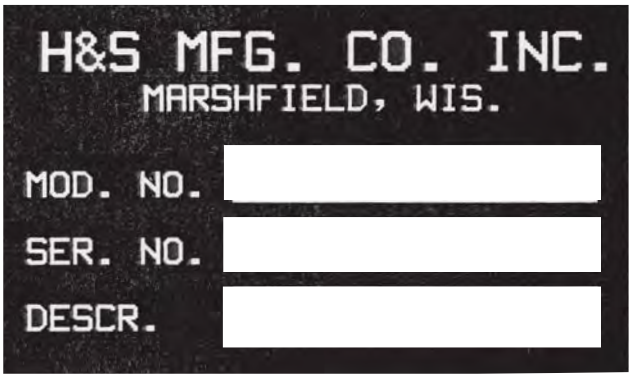

PLEASE RECORD NUMBERS FOR YOUR UNIT FOR QUICK REFERENCE

ABOUT IMPROVEMENTS

H&S IS CONTINUALLY STRIVING TO IMPROVE IT'S PRODUCTS

We must therefore, reserve the right to make improvements or changes whenever it becomes practical to do so without incurring any obligation to make changes or additions to the equipment previously sold.

FIGURE 1

MAIN FRAME REAR

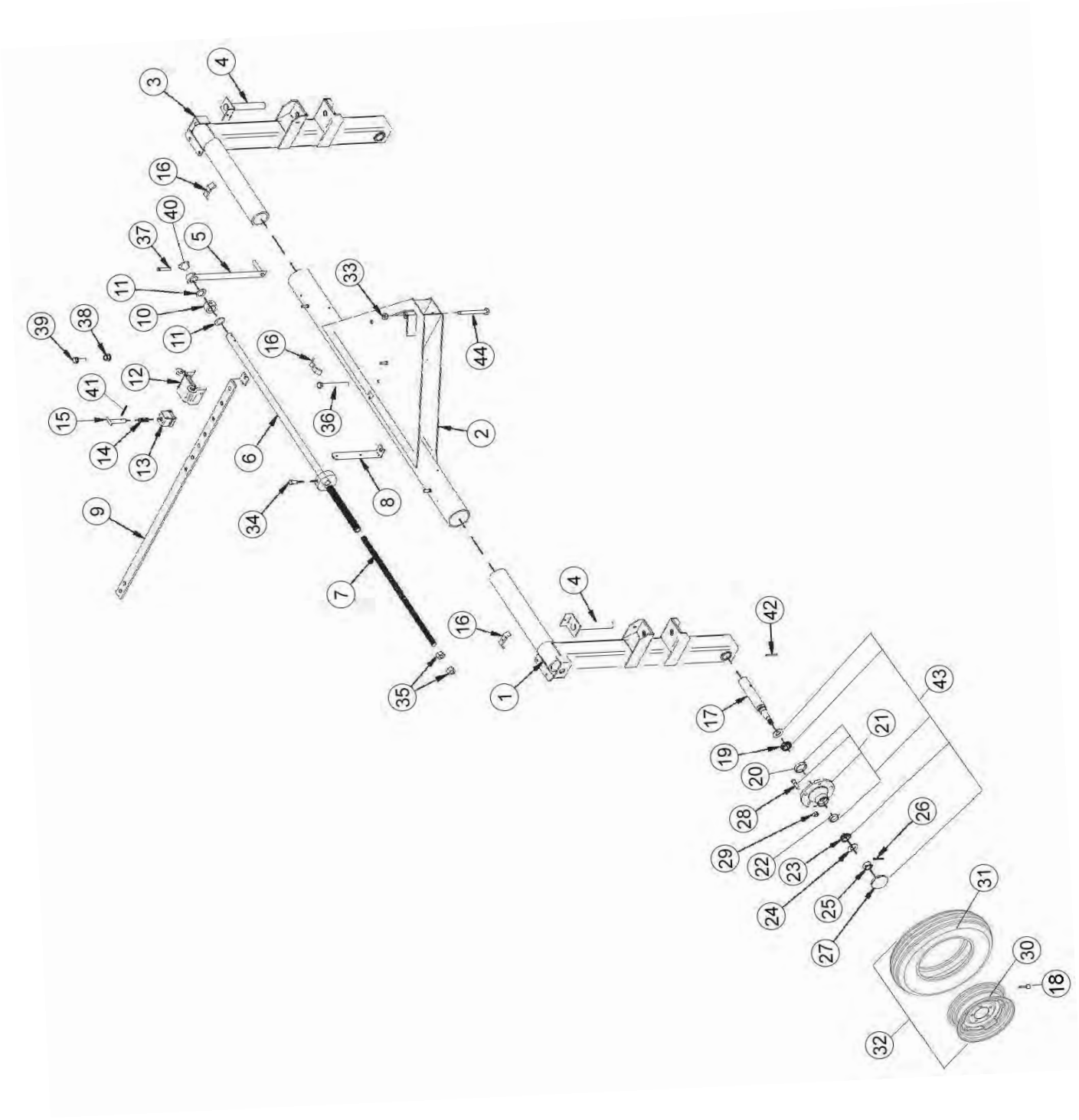

FIGURE 1
MAIN FRAME REAR

ITEM	PART#	DESCRIPTION
1	BFR754	RIGHT AXLE UPRIGHT
2	BFR498	REAR PIVOT ASSEMBLY
3	BFR755	LEFT AXLE UPRIGHT
4	BFR756	BEAM PIVOT SHAFT
5	BFR423	WIDTH ADJUSTMENT HANDLE
6	BFR485	REAR WIDTH ADJUSTMENT TUBE
7	BFR420	REAR WIDTH ADJUSTMENT ROD
8	BFR649	SMV BRACKET
9	BFR611	WIDTH ADJUSTMENT BAR
10	BFR422	WIDTH ADJUSTMENT COLLAR
11	BFR523	POLY WASHER
12	BFR613	WIDTH ADJUSTMENT STOP
13	BFR239	SLEEVE ADJUSTABLE LOCK
14	BFR240	SPRING
15	BFR241	ADJUSTMENT HANDLE
16	23N67	HOSE HOLDER
17	BFR449	SPINDLE
18	72436	VALVE STEM, 1-1/2
19	17G145	TAPERED ROLLER BEARING, 1.249 BORE
20	17G146	OUTER RACE
21	BFR60	HUB
22	BFR61	OUTER RACE
23	BFR62	OUTER BEARING
24	YWFL24010	WASHER, FLAT, SAE 3/4, PLAIN
25	YNSL24010	HEX NUT, SLOTTED, 3/4"-16
26	YPCT05010	COTTER PIN, 5/32" X 1-1/2"
27	BFR66	HUB CAP
28	YBSD16005	STUD BOLT, 1/2"-20 UNF X 1-7/8" (3/8" SHOULDER)
29	YNWL16005	WHEEL NUT, 1/2"-20 UNF
30	BFR67	WHEEL 5 X 15
31	BFR128	670 X 15 TIRE 6-PLY
32	32006	6.70-15 TIRE ON 5" X 15" WHEEL
33	YNHX20005	HEX NUT, 5/8"-11 PLATED
34	YBHH16010	BOLT, 1/2" X 1" GR. 5
35	YNAC24005	HEX NUT, ACME, 3/4"-6
36	YBHH20085	BOLT, 5/8" X 5" GR. 5
37	YBHH12090	BOLT, 3/8" X 2-1/2" GR. 5
38	BFR642	WIDTH ADJUSTMENT SPACER
39	YSHW10010	5/16"-18 X 1-1/4" HEX WASHER SLOT TYPE F ZINC
40	BFR636	PLASTIC PIPE CAP - 11 CAP PLUG
41	YPCT05020	COTTER PIN, 5/32 X 1-3/4
42	YPEX12025	EXPANSION PIN, 3/8" X 2-3/4"
43	BFR75	HUB ASSY, GROUND WHEEL
44	YBHH20107	BOLT, 5/8" X 7-1/2" GR. 5

FIGURE 2
MAIN FRAME POLE AND LINKAGE

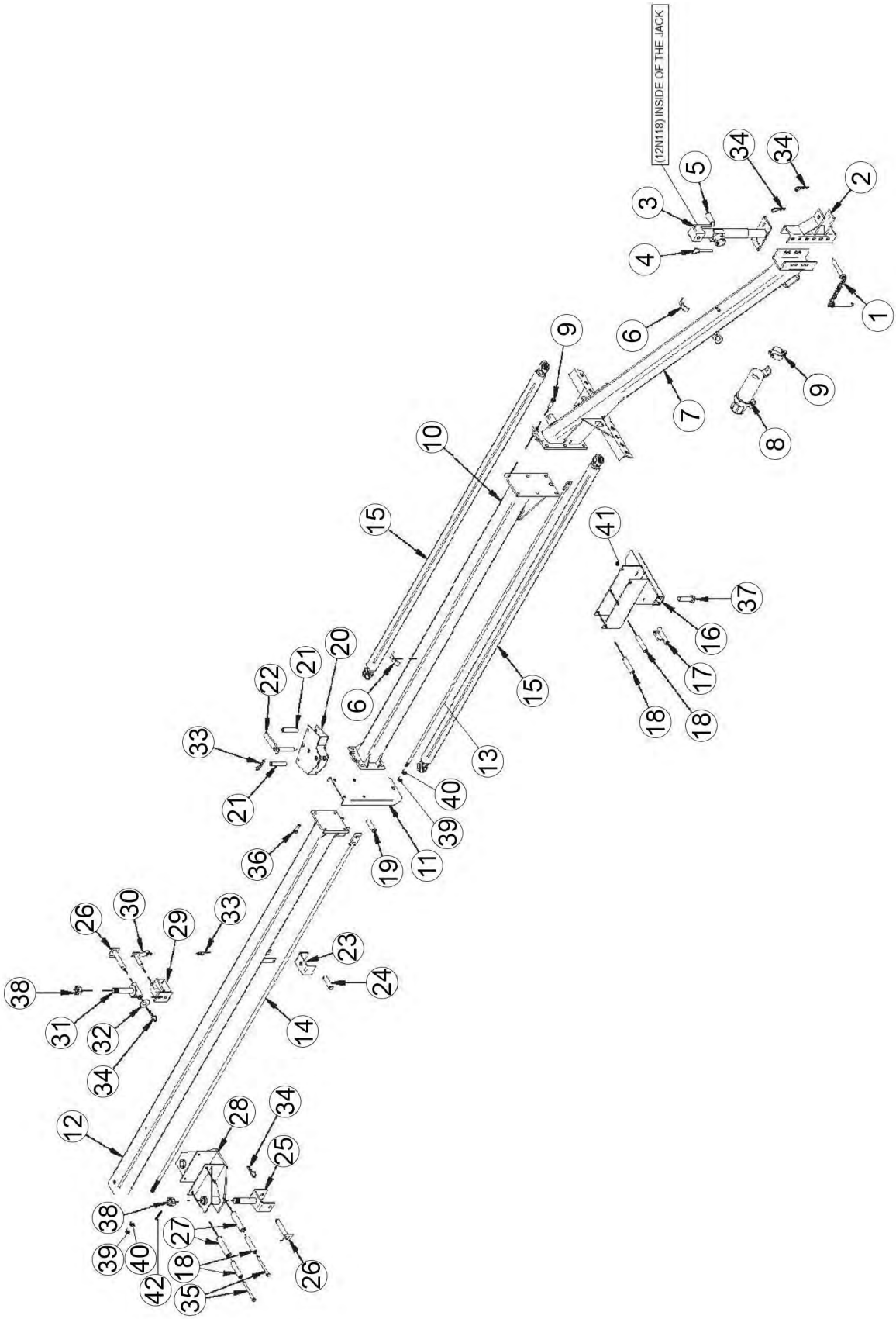

FIGURE 2
MAIN FRAME POLE AND LINKAGE

ITEM	PART#	DESCRIPTION
1	BFR450	HITCH PIN
2	BFR157	HITCH
3	BFR753	JACK
4	12N117	JACK PIN & CHAIN
5	5N78	JACK HANDLE
*	12N118	REPLACEMENT BEARING
6	HE42	HOSE HOLDER
7	BFR660	POLE
8	S522	MANUAL HOLDER
9	S523	MANUAL CLAMP - LARGE
10	BFR385	CENTER POLE SECTION
11	BFR399	LINKAGE STOP
12	BFR397	BACK POLE SECTION
13	BFR502	FRONT ROD
14	BFR503	BACK ROD
15	BFR390	FRONT LINKAGE
16	BFR387	FRONT LINKAGE SLIDER
17	BFR388	HOSE GUIDE SPACER
18	BFR389	SLIDER SPACER
19	BFR396	CYLINDER PIN
20	BFR398	CENTER SLIDER
21	BFR400	CENTER SLIDER SPACER
22	BFR401	CENTER SLIDER PIN
23	BFR402	HOSE GUIDE
24	BFR634	CYLINDER PIN
25	BFR410	BACK LINKAGE YOKE RH
26	BFR413	PIVOT YOKE SHAFT PIN
27	BFR404	BACK SLIDER ROLLER
28	BFR440	BACK LINKAGE SLIDER
29	BFR411	BACK LINKAGE YOKE LH
30	BFR412	BACK LINKAGE YOKE PIN
31	BFR414	LEFT PIVOT YOKE SHAFT
32	BFR441	STOP WASHER
33	YPHR02010	HAIR PIN, #21-07
34	YPHR06040	HAIR PIN, 3/16" X 3-3/4"
35	YBHH16160	BOLT, 1/2" X 5-1/2" GR. 5
36	YBHH20025	BOLT, 5/8" X 2" GR. 5
37	YBHH32010	BOLT, 1"-8 X 3-1/2" GR. 5
38	YNSL36005	HEX NUT, SLOTTED, 1-1/4"-12
39	YNHX24010	HEX NUT, 3/4-16
40	YNSF24006	HEX NUT, SERRATED FLANGE 3/4"-16
41	YNHX16005	NUT, HEX, 1/2-13, NA, A, ZC
42	YPCT05025	COTTER PIN, 5/32 X 2

NOTE: * MEANS NOT SHOWN

FIGURE 3
RAKE BEAM AND ARMS

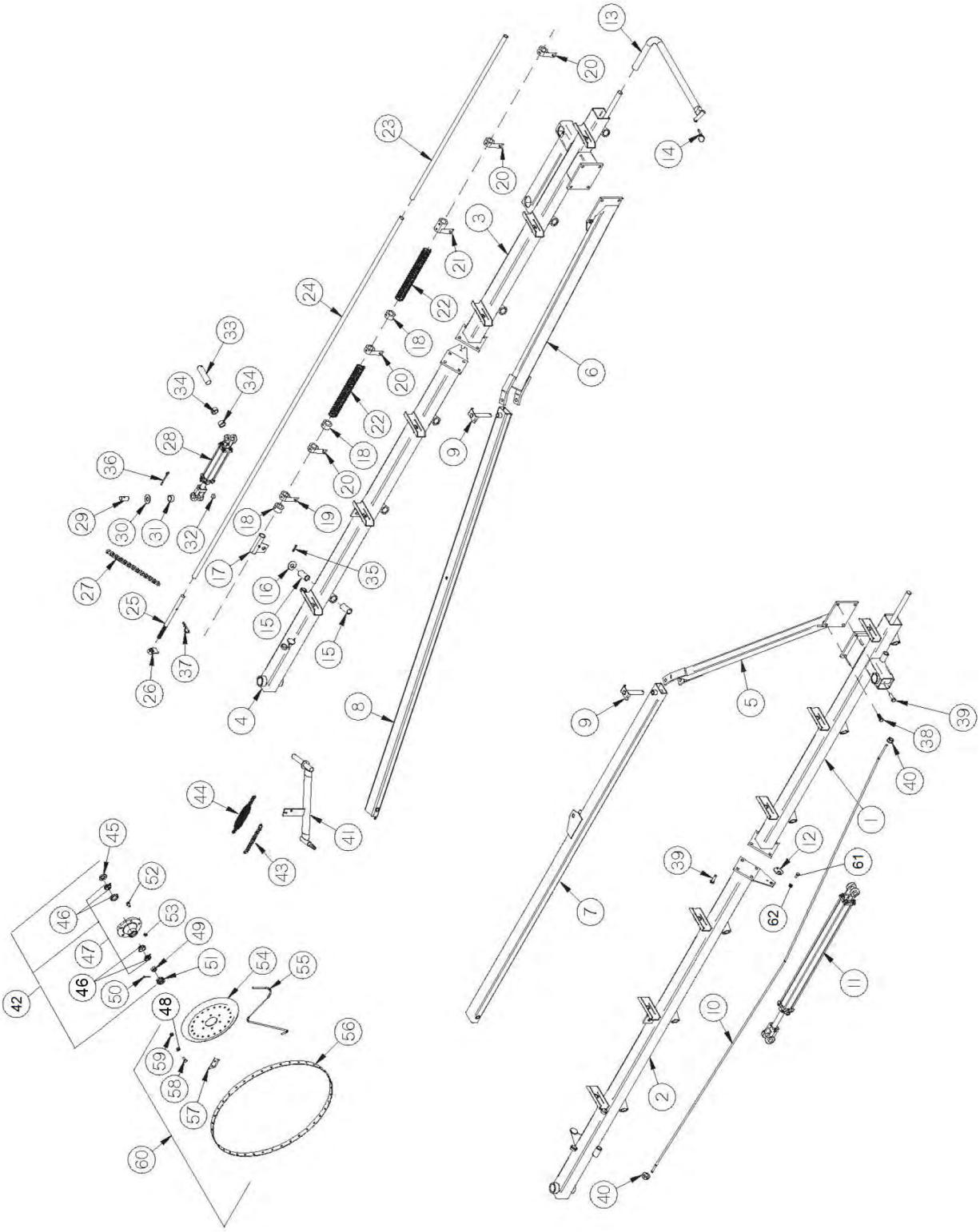

FIGURE 3
RAKE BEAMS AND ARMS

ITEM	PART #	DESCRIPTION
1	BFR406	FRONT RAKE BEAM RH
2	BFR758	BACK RAKE BEAM RH
3	BFR407	FRONT RAKE BEAM LH
4	BFR759	BACK RAKE BEAM LH
5	BFR391	RAKE BEAM ARM RH
6	BFR392	RAKE BEAM ARM LH
7	BFR394	RIGHT REAR LINKAGE
8	BFR395	LEFT REAR LINKAGE
9	BFR393	RAKE BEAM ARM PIN
10	BFR612	SIDE ARM STABILIZER ROD
11	56004	HYDRAULIC CYLINDER
12	DF22	WASHER
13	BFR384	TRANSPORT LOCK PIPE LH
*	BFR415	TRANSPORT LOCK PIPE RH
14	YPLY12010	LYNCH PIN, 3/8" X 1-3/4"
15	BFR425	RAKE ARM BUSHING W/ FLANGE
16	BFR229	RAKE ARM WASHER
17	BFR428	HYDRAULIC CYLINDER END SLIDE LH
*	BFR429	HYDRAULIC CYLINDER END SLIDE RH
18	BFR82	PIPE CLAMPS
19	BFR622	SPRING BRACKET (2 HOLE)
20	BFR431	LH SPRING BRACKET
*	BFR430	RH SPRING BRACKET
21	BFR432	LH LIFTING PIPE CONNECTOR
*	BFR433	RH LIFTING PIPE CONNECTOR
22	BFR84	COMPRESSION SPRING
23	BFR520	LIFTING PIPE FRONT
24	BFR519	LIFTING PIPE BACK
25	BFR427	RAKE ARM LOCK-UP SHAFT
26	BFR426	RAKE PRESSURE HANDLE
27	BFR111	BACK RAKE ARM ADJUSTMENT CHAIN
28	55999	HYDRAULIC LIFT CYLINDER CYLINDER
29	BFR517	PIN
30	16SV136	WASHER
31	K106	CYLINDER SPACER

NOTE: * MEANS NOT SHOWN

FIGURE 3
RAKE BEAMS AND ARMS

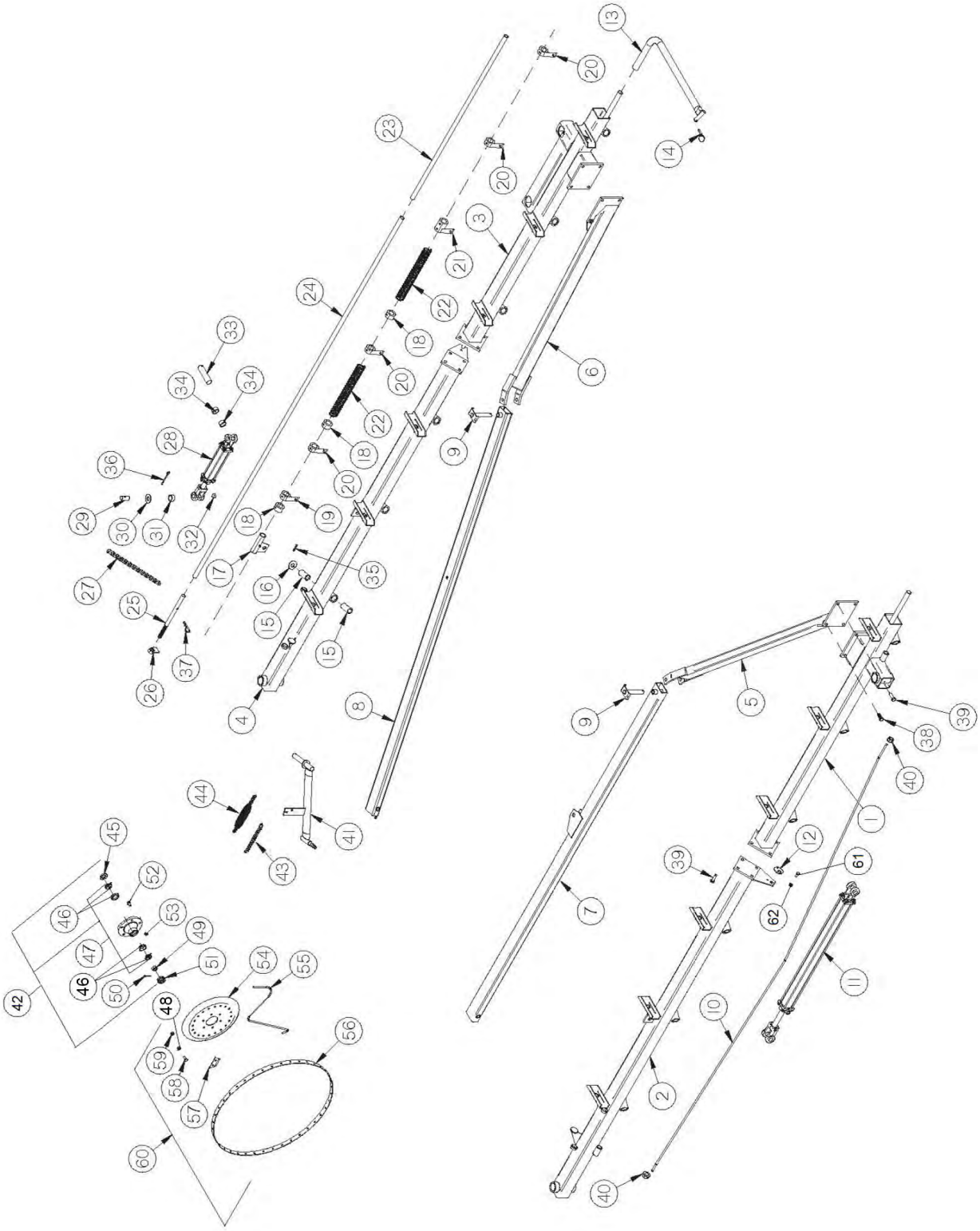

FIGURE 3
RAKE RAKE BEAMS AND ARMS

ITEM	PART#	DESCRIPTION
32	BFR506	NYLON WEAR BLOCK
33	T143	CYLINDER PIN
34	X94	CYLINDER SPACERS EXPANSION
35	YPEX10015	PIN, 5/16" X 1-3/4" COTTER PIN,
36	YPCT07005	7/32" X 2 “
37	YPHR08040	HAIR PIN, 1/4" X 5"
38	YBHH20020	BOLT, 5/8" X 1-3/4" GR. 5
39	YBHH20025	BOLT, 5/8" X 2" GR. 6
40	YNFG24005	HEX NUT, FLANGED-LOCK, 3/4"-10
41	BFR436	RAKE ARM LH
*	BFR437	RAKE ARM RH
42	1081	RAKE WHEEL HUB AND SPINDLE
43	BFR140	RAKE ARM ADJUSTMENT CHAIN
44	BFR138	RAKE ARM SPRING
45	T163	SEAL
46	600012	INNER BEARING RACE
47	BFR32	RAKE WHEEL HUB
48	YWLO76015	WASHER, LOCK, M10
49	YNSL24010	HEX NUT,SLOTTED, 3/4"-16
50	YPCT05010	COTTER PIN, 5/32" X 1-1/2"
51	T173	HUB CAP
52	YBHH76005	BOLT, 10MM X 25MM
53	YNHX76015	HEX NUT, 10MM
54	T179	RAKE WHEEL CENTER
55	T176	RAKE WHEEL TOOTH
56	T177	OUTER RING
57	T178	RAKE TOOTH CLIP
58	YBCR76005	CARR. BOLT, 10MM X 25MM 10MM
59	YNHX76015	NUT HEX, M10-1.5
60	T174	RAKE WHEEL LH
*	BFR31	RAKE WHEEL RH
61	YBHH10010	BOLT, HEX, 5/16-18 X 1, G5, ZC
62	YWLO10005	WASHER LOCK, 5/16

NOTE: * MEANS NOT SHOWN

FIGURE 4
GAUGE WHEEL

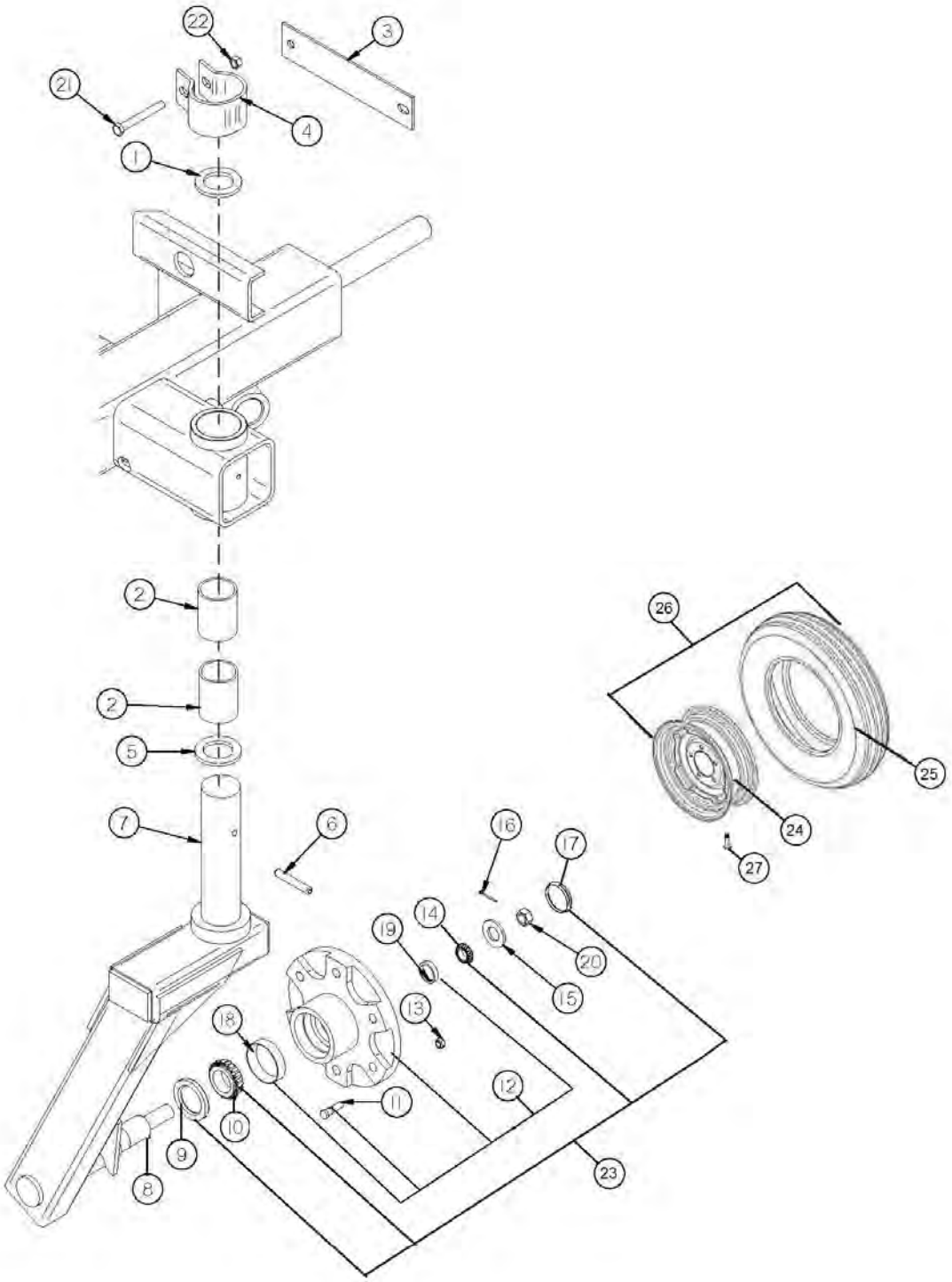

FIGURE 4
GAUGE WHEEL

ITEM	PART #	DESCRIPTION
1	BFR309	GAUGE WHEEL WASHER
2	RG26	BUSHING, BRONZE, GAUGE WHEEL
3	BFR310	BRAKE PAD (2)
4	BFR311	BRAKE COLLAR
5	RG24	BRONZE WASHER
6	YPEX10025	EXPANSION PIN, 5/16" X 2-3/4"
7	BFR312	COMPLETE FORK RH
*	BFR316	COMPLETE FORK LH
8	BFR56	SPINDLE
9	BFR57	GREASE SEAL
10	17G145	TAPERED ROLLER BEARING, 1.249 BORE
11	YBSD16005	STUD BOLT, 1/2"-20 UNF X 1-7/8" (3/8"SHOULDER)
12	BFR60	HUB WITH RACES
13	YNWL16005	WHEEL NUT, 1/2"-20 UNF
14	BFR62	OUTER BEARING
15	YWFL24010	WASHER, FLAT, 3/4" USS
16	YPCT05010	COTTER PIN, 5/32" X 1-1/2"
17	BFR66	HUB CAP
18	17G146	OUTER RACE
19	BFR61	OUTER RACE
20	YNSL24010	HEX NUT, SLOTTED, 3/4"-16
21	YBHH12125	BOLT, 3/8" X 3" GR. 5 FULL THREAD
22	YNHX12005	HEX NUT, 3/8"-16
23	BFR75	COMPLETE HUB FOR GROUND WHEEL
24	BFR67	WHEEL 5 X 15
25	BFR128	6.70 X 15 TIRE
26	32006	6.70-15 TIRE ON 5" X 15" WHEEL
27	72436	VALVE STEM, 1-1/2" RUBBER

NOTE: * MEANS NOT SHOWN

FIGURE 5
RAKE HYDRAULICS

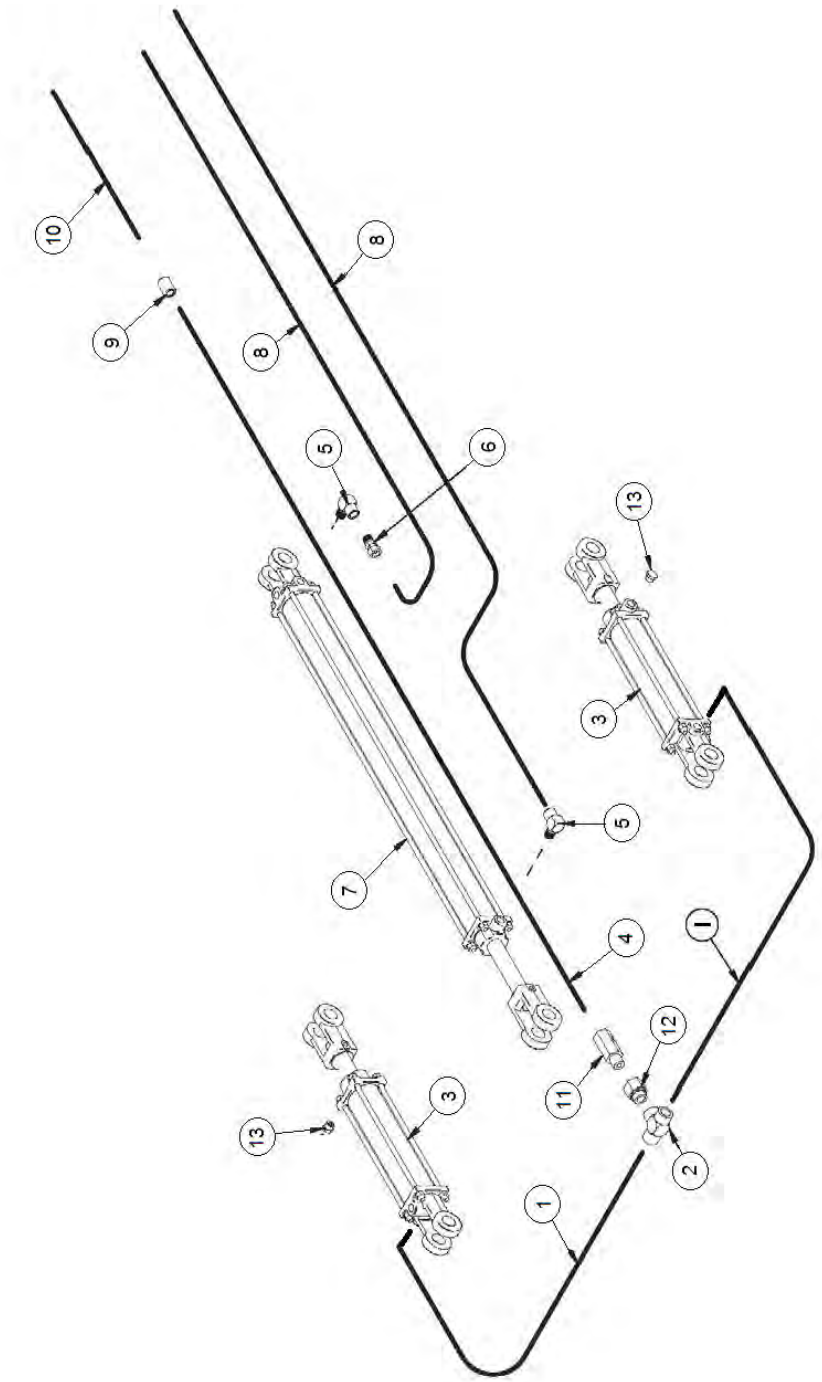

FIGURE 5
RAKE HYDRAULICS

ITEM	PART #	DESCRIPTION
1	37N60	108" HOSE
2	BFR74	3/8" FEMALE TEE
3	55999	HYDRAULIC LIFT CYLINDER
4	23N302	264" HOSE
5	23N234	3/8" STREET ELBOW
6	58723	MALE ADAPTER UNION W/ ORIFICE
7	56004	HYDRAULIC OPEN CYLINDER
8	BFR621	256" HOSE
9	HE60	3/8" PIPE COUPLER
10	BFR448	66" HOSE
11	BFR554	FLOW VALVE
12	BFR555	ADAPTER
13	BFR70	VENT PLUG

FIGURE 6
HYDRAULIC LIFT CYLINDER

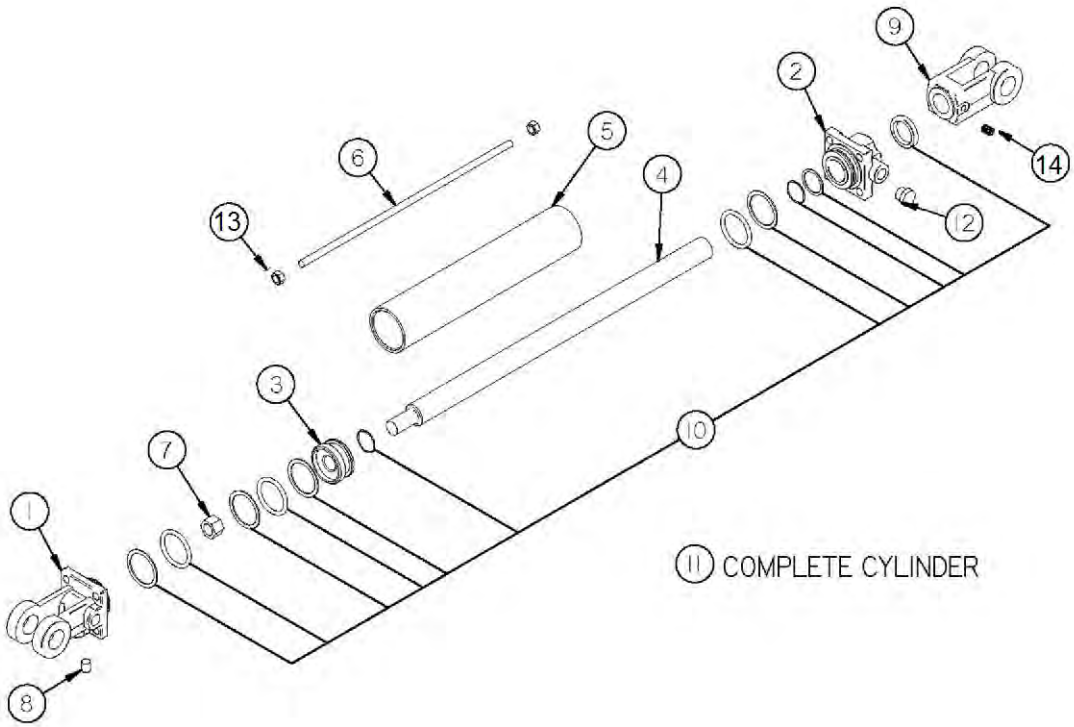

ITEM	PART #	DESCRIPTION
1	23N142A	CLEVIS CAP
2	56174	ROD CAP
3	56180	PISTON
4	T184A	ROD
5	BFR68	CYLINDER TUBE
6	T186	TIE ROD
7	23N148	PISTON NUT
8	23N149	PLUG
9	23N150A	ROD CLEVIS
10	56187	SEAL KIT
11	55999	COMPLETE CYLINDER
12	BFR70	VENT PLUG
13	YNHX12006	NUT, HEX, 3/8-24, NA, G2, ZC
14	YSSO12015	SET SCREW, SOCKET, 3/8-24 X 3/8

FIGURE 7
OPENING CYLINDER

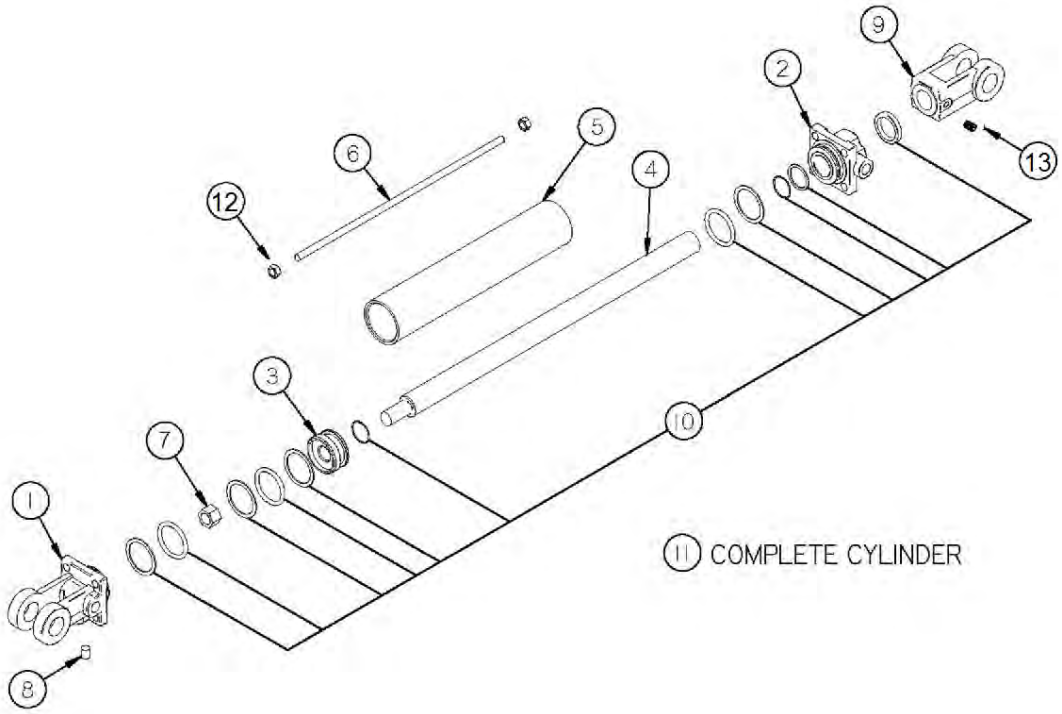

ITEM	PART#	DESCRIPTION
1	23N142A	CLEVIS CAP
2	56174	ROD CAP
3	56180	PISTON
4	BFR654	ROD
5	BFR655	CYLINDER TUBE
6	BFR656	TIE ROD
7	23N148	PISTON NUT
8	23N149	PLUG
9	23N150A	ROD CLEVIS
10	56187	SEAL KIT
11	56004	COMPLETE CYLINDER
12	YNHX12006	NUT, HEX, 3/8-24,NA,G2,ZC
13	YSSO12015	SET SCREW, SOCKET, 3/8-24 X 3/8

FIGURE 8
OPTIONAL 2 WHEEL CENTER KICKER WHEEL

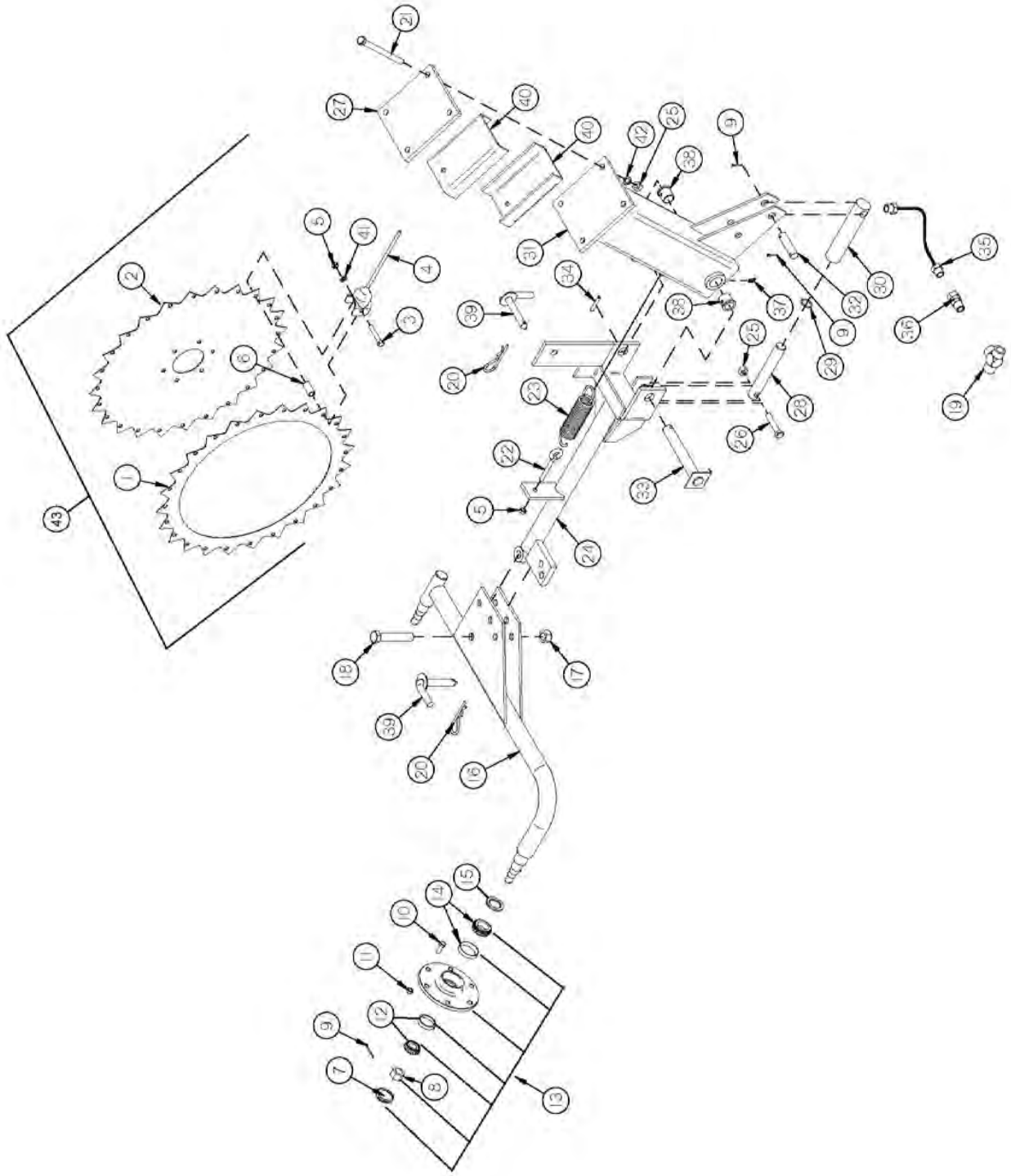

FIGURE 8
OPTIONAL 2 WHEEL CENTER KICKER WHEEL

ITEM	PART #	DESCRIPTION
1	BFR369	RAKE WHEEL RING
2	BFR370	RAKE WHEEL CENTER
3	YBHH12100	BOLT, 3/8" X 2-1/4" GR. 5
4	T82	RAKE WHEEL TOOTH
5	YNTL12005	HEX NUT, TOP LOCK, 3/8"-16
6	BFR371	RAKE WHEEL SPACER
7	T173	HUB CAP
8	YNSL24010	HEX NUT, SLOTTED, 3/4"-16
9	YPCT05010	COTTER PIN, 5/32" X 1-1/2"
10	YBHH76005	BOLT, 10MM X 25MM
11	YNHX76015	HEX NUT, 10MM
12	600014	OUTER BEARING RACE
13	1081	RAKE WHEEL HUB AND SPINDLE
14	600012	INNER BEARING RACE
15	T163	SEAL
16	BFR511	CENTER KICKER WHEEL ARM
17	YNTL24005	HEX NUT, TOP LOCK, 3/4"-10
18	YBHH24050	BOLT, 3/4" X 3" GR. 5
19	BFR74	3/8" PIPE TEE
20	YPHR02010	HAIR PIN, #21-07
21	YBHH16175	BOLT, 1/2" X 6-1/2" GR. 5
22	YBTE12025	TURNED EYE BOLT, 3/8" X 3" FULL THREAD
23	BR62	SPRING
24	BFR512	CENTER KICKER WHEEL PIVOT
25	YNTL16005	HEX NUT, TOP LOCK, 1/2"-13
26	YBHH16080	BOLT, 1/2" X 2-1/2" GR. 5
27	BFR513	KICKER WHEEL MOUNT
28	BFR114	PISTON
29	BFR115	O-RING
30	BFR116	HYDRAULIC CYLINDER
31	BFR514	KICKER WHEEL OFFSET
32	BFR515	CYLINDER PIN
33	BFR379	AXLE SHAFT
34	YPEX10015	EXPANSION PIN, 5/16" X 1-3/4"
35	BFR121	HOSE
36	58720	3/8 MALE ADPTER WITH .022 ORIFICE
37	RG21	GREASE ZERK, 45 DEGREE
38	BFR27	BUSHING
39	BFR197	LOCKING PIN
40	BFR516	FILLER PLATE
41	YWLO12005	WASHER, LOCK, 3/8"
42	YWLO16005	WASHER, LOCK, 1/2"
43	BFR748	COMPLETE WHEEL ASSEMBLY

NOTE: * MEANS NOT SHOWN

FIGURE 9
OPTIONAL 3 WHEEL CENTER KICKER WHEEL

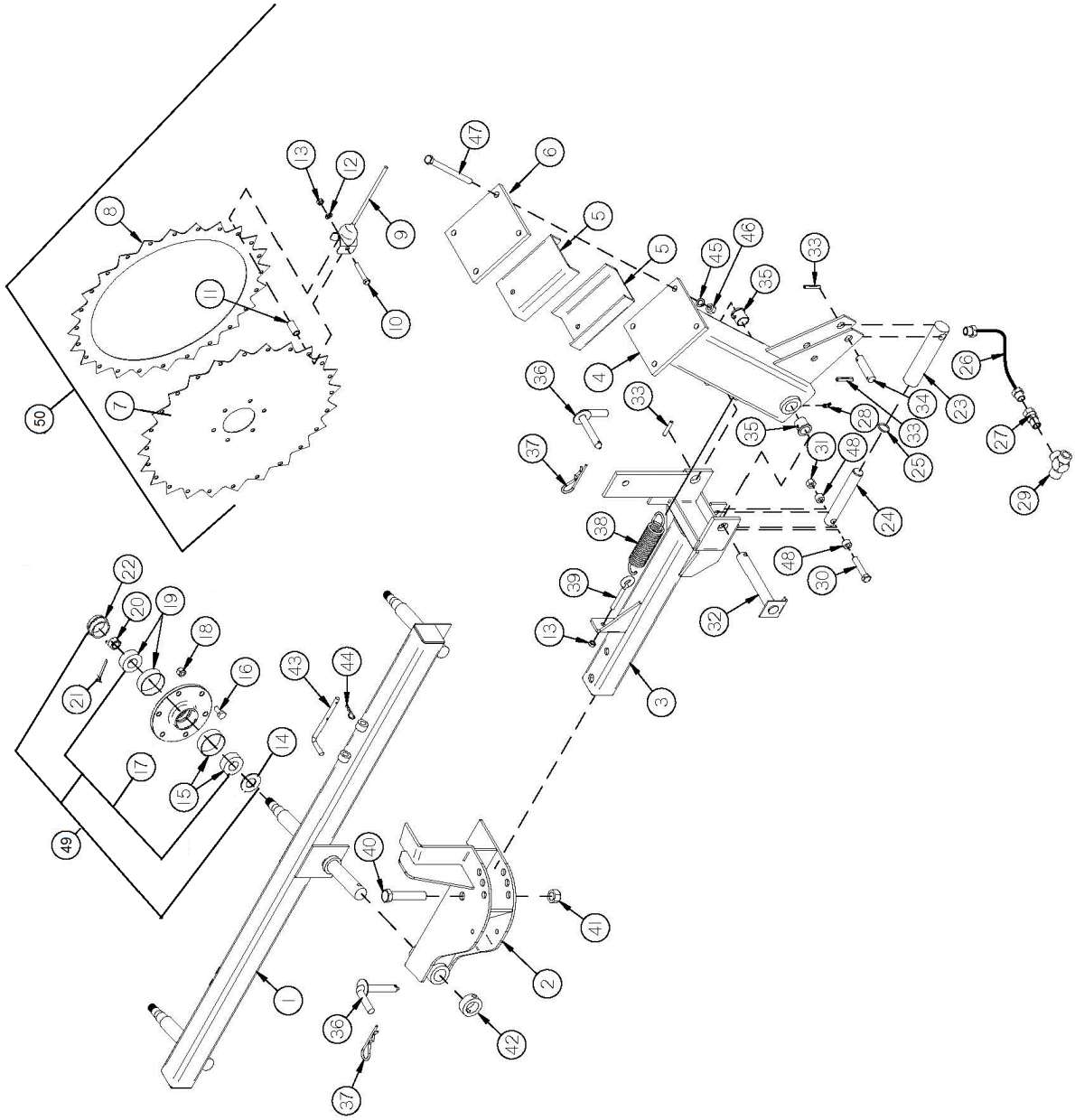

FIGURE 9
OPTIONAL 3 WHEEL CENTER KICKER WHEEL

ITEM	PART #	DESCRIPTION
1	BFR717	KICKER RAKE BEAM
2	BFR718	PIVOT
3	BFR719	SQUARE RAKE ARM
4	BFR514	KICKER WHEEL OFFSET
5	BFR516	FILLER PLATE
6	BFR513	KICKER WHEEL MOUNT
7	BFR370	RAKE WHEEL CENTER
8	BFR369	RAKE WHEEL RING
9	T82	RAKE WHEEL TOOTH BOLT,
10	YBHH12100	3/8" X 2-1/4" GR. 5 RAKE
11	BFR371	WHEEL SPACER WASHER,
12	YWLO12005	LOCK, 3/8"
13	YNTL12005	HEX NUT, TOP LOCK, 3/8"-16
14	T163	SEAL
15	600012	INNER BEARING RACE
16	YBHH76005	BOLT, 10MM X 25MM
17	BFR32	RAKE WHEEL HUB
18	YNHX76015	HEX NUT, 10MM
19	600014	OUTER BEARING RACE
20	YNSL24010	HEX NUT, SLOTTED, 3/4"-16
21	YPCT05010	COTTER PIN, 5/32" X 1-1/2"
22	T173	HUB CAP
23	BFR116	HYDRAULIC CYLINDER
24	BFR114	PISTON
25	BFR115	O-RING
26	BFR121	HOSE
27	58720	3/8 MALE ADPTER WITH .022 ORIFICE
28	RG21	GREASE ZERK, 45 DEGREE
29	BFR74	3/8" PIPE TEE
30	YBHH16115	BOLT, 1/2" X 3-1/2" GR. 5
31	YNTL16005	HEX NUT, TOP LOCK, 1/2"-13
32	BFR379	AXLE SHAFT
33	YPEX10015	EXPANSION PIN, 5/16" X 1-3/4"
34	BFR515	CYLINDER PIN
35	BFR27	BUSHING
36	BFR197	LOCKING PIN
37	YPHR02010	HAIR PIN, #21-07
38	BR62	SPRING
39	YBTE12025	TURNED EYE BOLT, 3/8" X 3" FULL THREAD
40	YBHH24070	BOLT, 3/4-10" X 4" GR. 5
41	YNTL24005	HEX NUT, TOP LOCK, 3/4"-10
42	BFR720	PIVOT LOCK COLLAR
43	BFR721	BEAM LOCK PIN
44	YPHR02005	HAIR PIN, #21-05 (1-7/8" LONG, 3/8-7/16" SHAFT)
45	YWLO16005	WASHER, LOCK, 1/2"
46	YNTL16005	HEX NUT, TOP LOCK, 1/2"-13
47	YBHH16175	BOLT, 1/2" X 6-1/2" GR. 5
48	BFR722	LIFT CYLINDER SPACER
49	BFR76	COMPLETE HUB
50	BFR748	COMPLETE WHEEL ASSEMBLY

NOTE: * MEANS NOT SHOWN

FIGURE 10
OPTIONAL LIGHTS

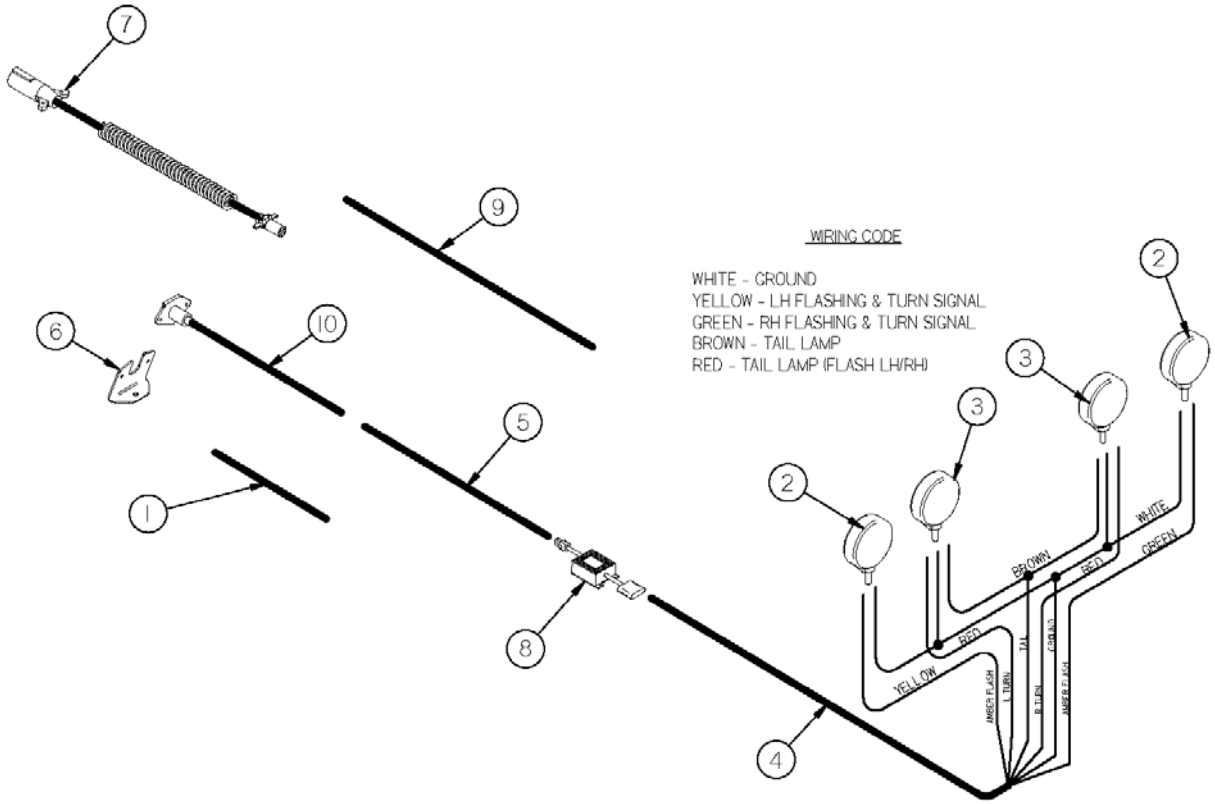

ITEM	PART #	DESCRIPTION
1	BFR666	16 WHEEL EXT. LIGHT HARNESS
2	DWM129	AMBER LIGHT
3	BFR675	RED LIGHT
4	BFR667	LIGHT HARNESS (6 WIRE)
5	BFR705	14 WHEEL LIGHT HARNESS
6	BFR659	MOUNTING BRACKET
7	TLPC	TRACTOR CORD (OPTIONAL)
8	69908	LIGHT MODULE
9	BFR668	12 WHEEL LIGHT HARNESS
10	BFR706	FRONT PIGTAIL
*	BFR671	12 WHEEL COMP. LIGHT HARNESS LESS OPTIONAL CORD
*	BFR707	14 WHEEL COMP. LIGHT HARNESS LESS OPTIONAL CORD
*	BFR708	16 WHEEL COMP. LIGHT HARNESS LESS OPTIONAL CORD

NOTE: * MEANS NOT SHOWN

FIGURE 11
OPTIONAL WIND GUARD KIT

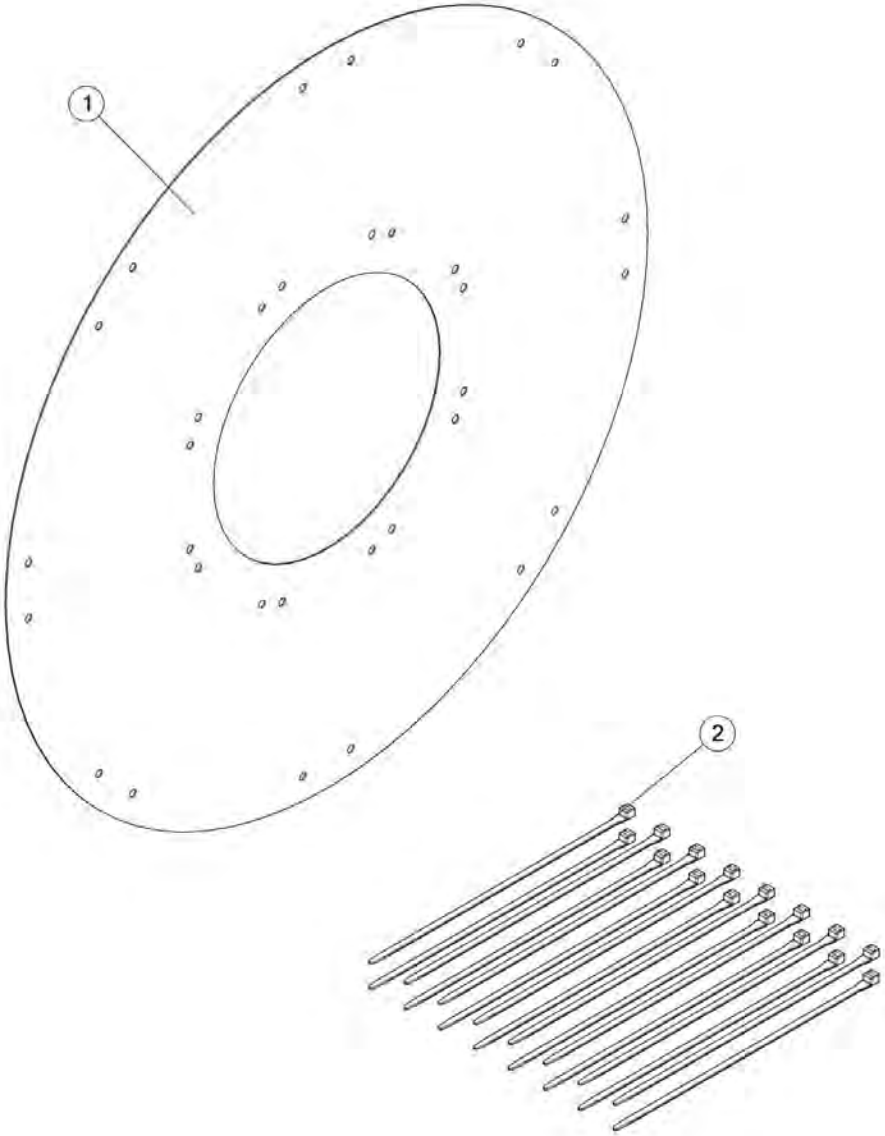

FIGURE 11
OPTIONAL WIND GUARD KIT

ITEM	PART #	DESCRIPTION
1	59040	POLY WIND GAURD, FOR 55" RAKE WHEEL
2	57626	15 INCH 120# BLACK CABLE TIE

FIGURE 12
OPTIONAL TANDEM AXLE

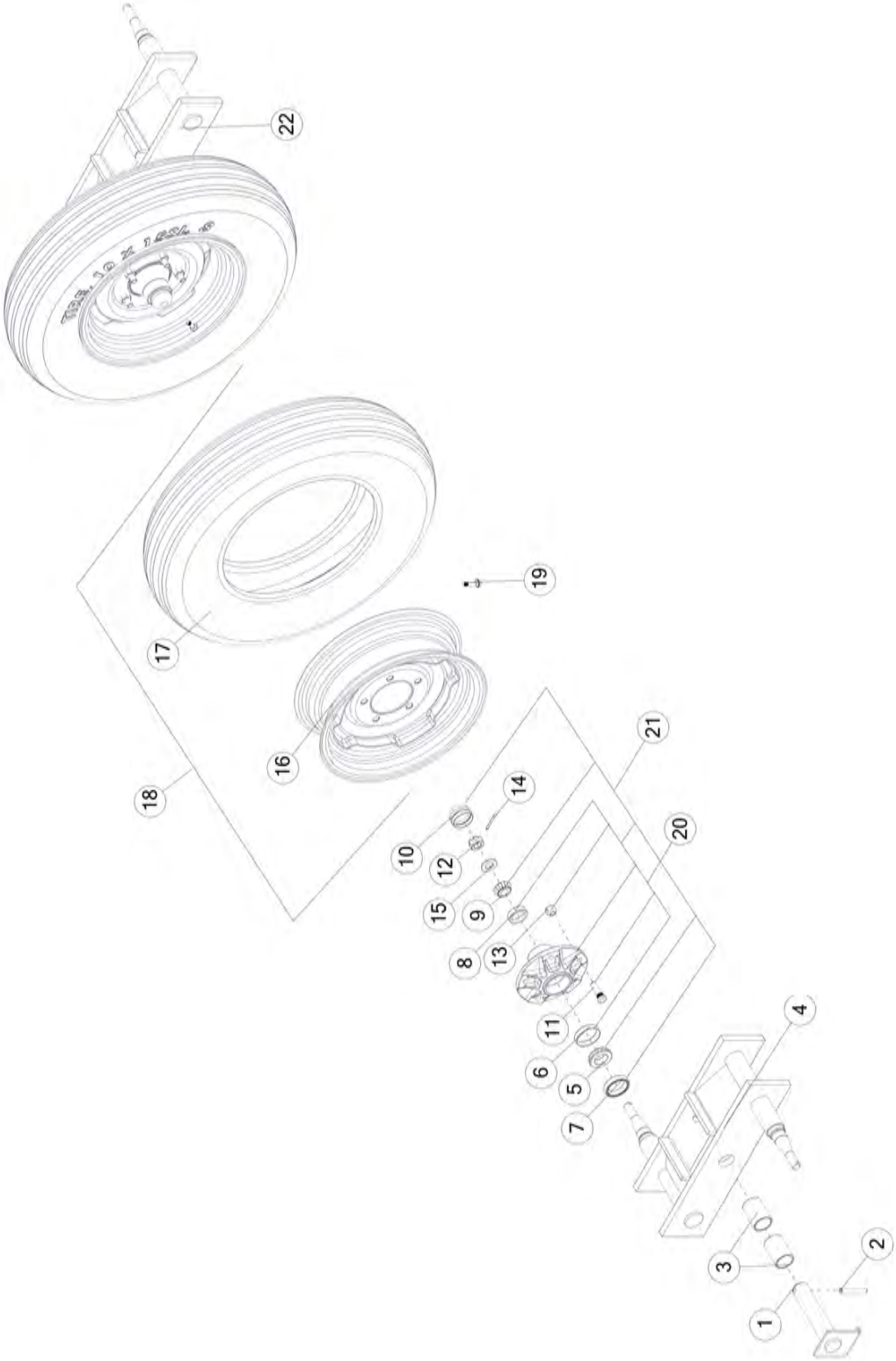

FIGURE 12

OPTIONAL TANDEM AXLE

ITEM	QTY	PART #	DESCRIPTION
1	2	BFR524	ASSY, TANDEM PIN
2	2	YPEX12025	EXPANSION PIN, 3/8" X 2-3/4"
3	4	BFR625	BUSHING, BRONZE, 1-3/4" X 1-1/2" X 2-1/2"
4	1	BFR509	ASSY, RH TANDEM AXLE
5	2	17G145	TAPERED ROLLER BEARING, 1.249 BORE
6	2	17G146	OUTER RACE
7	2	BFR57	GREASE SEAL
8	2	BFR61	OUTER RACE
9	2	BFR62	OUTER BEARING
10	2	BFR66	HUB CAP
11	10	YBSD16005	BOLT, STUD, 1/2-20UNF X 1-7/8 X 3/8, G5, ZC
12	2	YNSL24010	NUT, SLOT, 3/4-16, NA, G2, NF
13	10	YNWL16005	NUT, WHEEL, 1/2-20, NA, G5, ZC
14	2	YPCT05010	COTTER PIN 5/32" X 1-1/2"
15	2	YWFL24010	WASHER, FLAT, SAE 3/4, PLAIN
16	2	BFR67	WHEEL 5" X 15" 5 BOLT
17	2	BFR128	670 X 15 TIRE 6-PLY
*	2	75696	ST205/75R15-C RADIAL TIRE (OPTIONAL)
18	2	32006	6.70-15 TIRE ON 5" X 15" WHEEL
*	2	75697	205/75R15 TIRE ON AG WHEEL (OPTIONAL)
19	2	72436	VALVE STEM, 1-1/2" RUBBER
20	2	BFR60	HUB WITH RACES & STUDS
21	2	BFR75	HUB ASSY
22	1	BFR510	LH TANDEM AXLE

NOTE: * MEANS NOT SHOWN

FIGURE 13
OPTIONAL TIRE & WHEEL

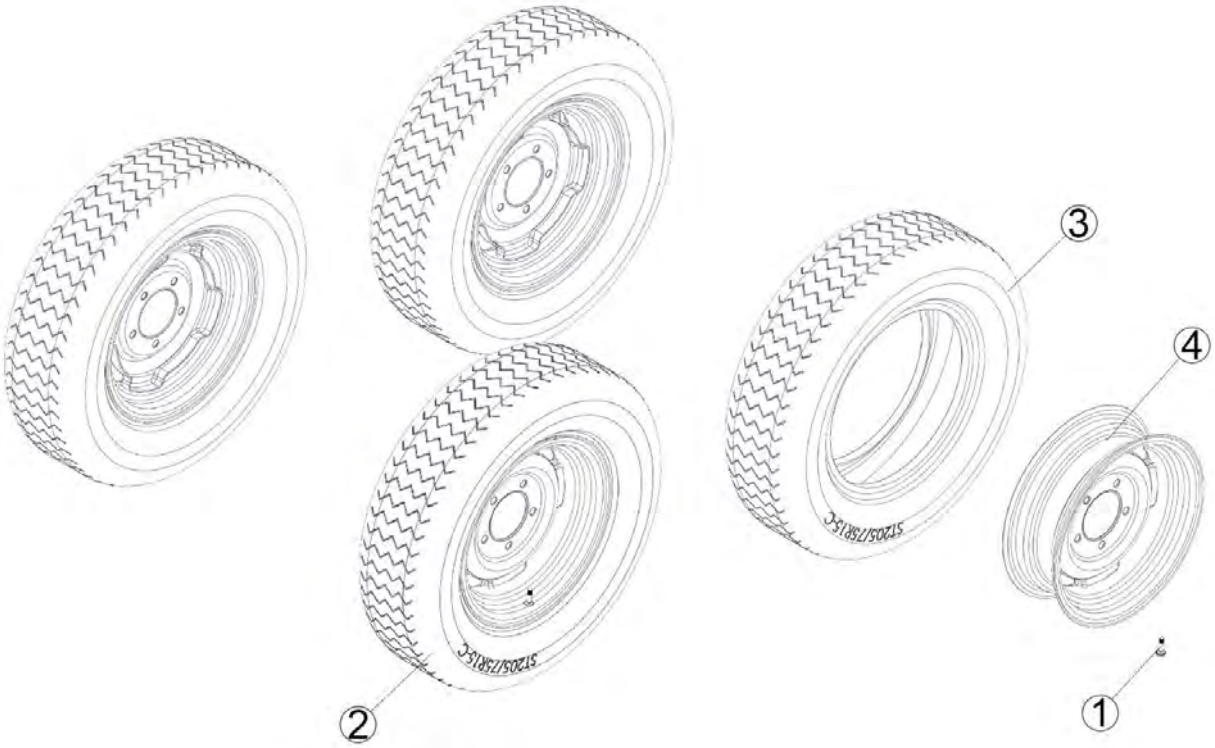

FIGURE 13
OPTIONAL TIRE & WHEEL

ITEM	QTY	PART #	DESCRIPTION
1	4	75697	ST205-75R15C ON 15X5, 5-BOLT
2	4	75696	ST205/75R15-C RADIAL TIRE
3	4	BFR67	WHEEL 5" X 15" 5 BOLT CREAM COLOR
4	4	72436	VALVE STEM, 1-1/2" RUBBER

PARTS NOTES

H&S MFG. CO.

products approved

for the

FEMA

SEAL OF QUALITY

SEAL OF QUALITY

FEMA

FARM EQUIPMENT MANUFACTURERS ASSOCIATION