H&S PARTS BOOK

AR3112
RAKE

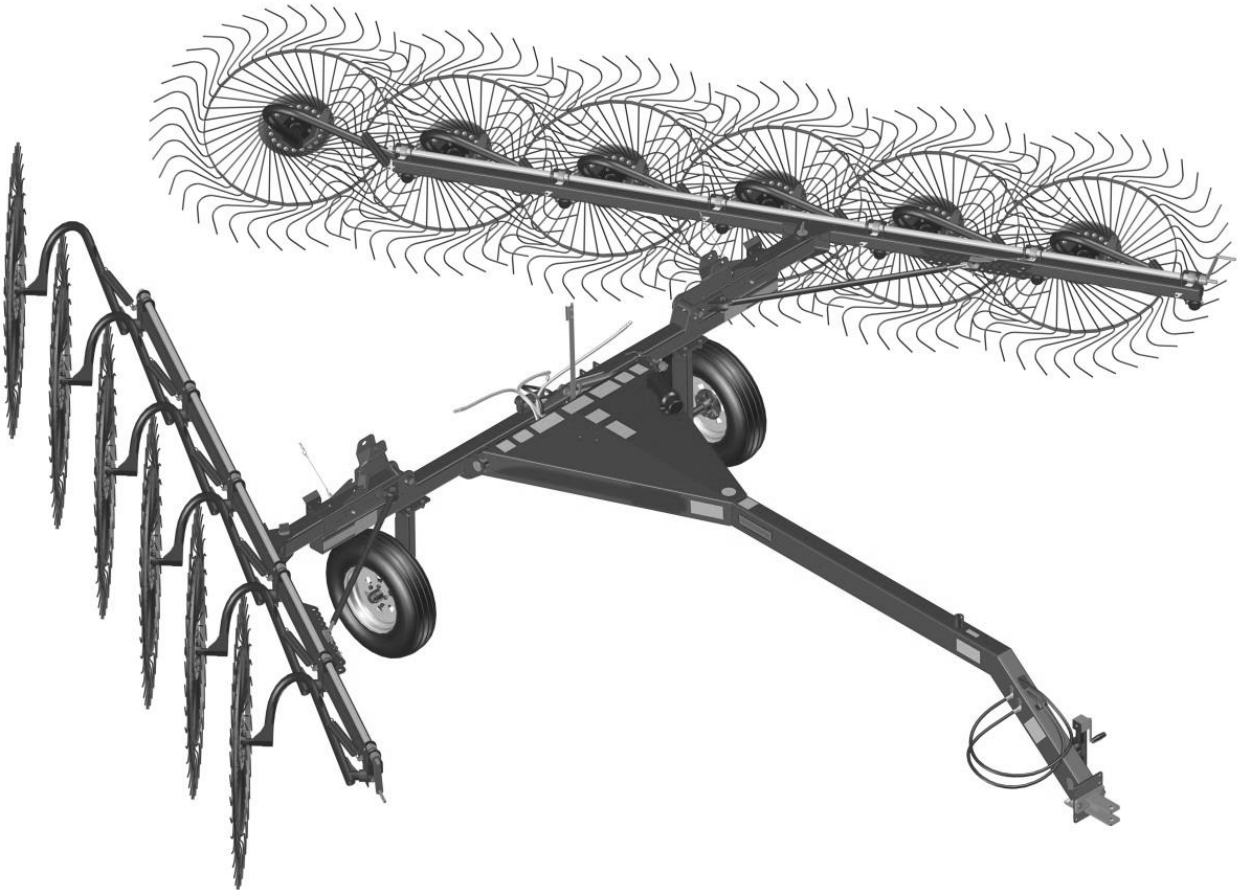

Revision #**01**
Starting Ser. **#613033**

Part **#73463**
HSMFG0616

P.O. BOX 768, MARSHFIELD, WI 54449
(715) 387-3414 FAX (715) 384-5463
www.hsmfgco.com

CONTENTS

Instructions For Ordering Parts - About Improvements 1
Figure 1 - Frame Components. 2-3
Figure 2 - Slider and Components. 4-5
Figure 3 - Hub Assembly. 6-7
Figure 4 - Rake Beam and Components. 8-9
Figure 5 - Rake Wheel Assembly. 10-11
Figure 6 - Optional Kicker Wheel. 12-13
Figure 7 - Hydraulics. 14-15
Figure 8 - Hydraulic Cylinder 16-17
Figure 9 - Optional Wind Guard 18-19
Parts Notes. 20

INSTRUCTIONS FOR ORDERING PARTS

All service parts should be ordered through your authorized H&S dealer. They will be able to give you faster service if you will provide them with the following

1. Model & Serial number is located on the left, rear main frame of your unit.
2. All reference to left or right apply to the machine as viewed from the rear.
3. Parts should not be ordered from illustration only. Please order by complete part number.
4. If your dealer has to order parts - give shipping instructions:

   VIA truck - large pieces (please specify local truck lines)

   VIA United Parcel Service (include full address)

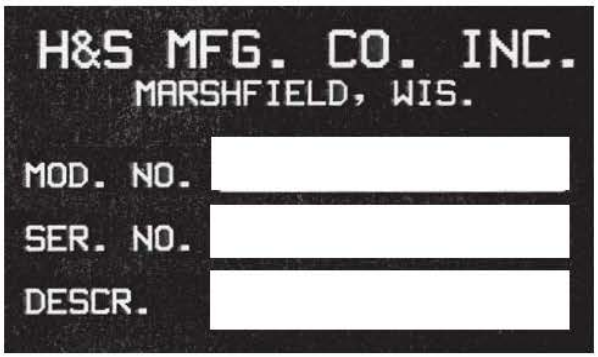

PLEASE RECORD NUMBERS FOR YOUR UNIT FOR QUICK REFERENCE

ABOUT IMPROVEMENTS

H&S IS CONTINUALLY STRIVING TO IMPROVE IT'S PRODUCTS

We must therefore, reserve the right to make improvements or changes whenever it becomes practical to do so without incurring any obligation to make changes or additions to the equipment previously sold.

FIGURE 1
FRAME COMPONENTS

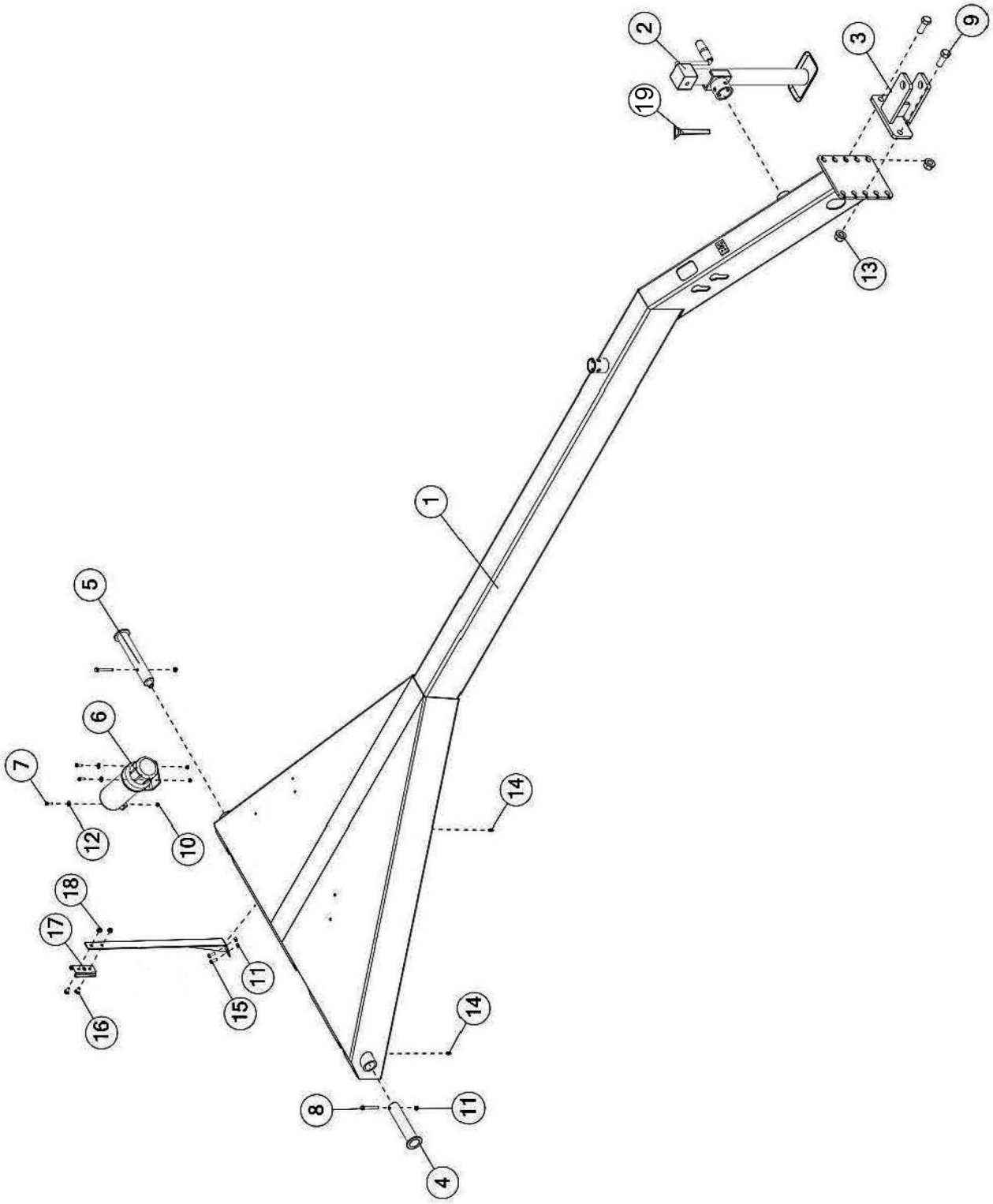

FIGURE 1

FRAME COMPONENTS

ITEM	QTY	PART #	DESCRIPTION
1	1	71835	POLE ASSY, DECAL
2	1	BFR753A	JACK, SIDEWIND,2000#
3	1	10ERWE06	10ER CLEVIS
4	1	10WR7	ASSY, PIVOT ARM PIN
5	1	0240WE05	PIVOT ARM PIN
6	1	S522	MANUAL HOLDER
7	3	YBHH08100	BOLT, 1/4 X 3/4 GR 5
8	2	YBHH10080	BOLT, 5/16 X 2-1/2 GR 5
9	2	YBHH24018	BOLT 3/4-10 X 2 GR 8
10	3	YNRL08005	HEX NUT, REVERSIBLE-SIDE LOCK, 1/4-20
11	4	YNRL10005	HEX NUT, REVERSIBLE-SIDE LOCK, 5/16-18
12	3	YWFL08005	WASHER, FLAT, 1/4 USS
13	2	YNFG24006	HEX NUT, FLANGED-LOCK, TOPLOCK GR. G- 3/4-10
14	2	G89	STRAIGHT ZERK 1/4-28X90
15	2	YBHH10105	BOLT, 5/16 X 3/4 GR 5
16	2	YBCR10030	CARR, BOLT, 5/16"-18 X 3/4" GR 5
17	1	F97	SMV BRACKET
18	2	YNFG10005	HEX NUT, FLANGED-LOCK, 5/16-18
19	1	12N117	PIN, 0.56, 5.19, JACK

FIGURE 2
SLIDER & COMPONENTS

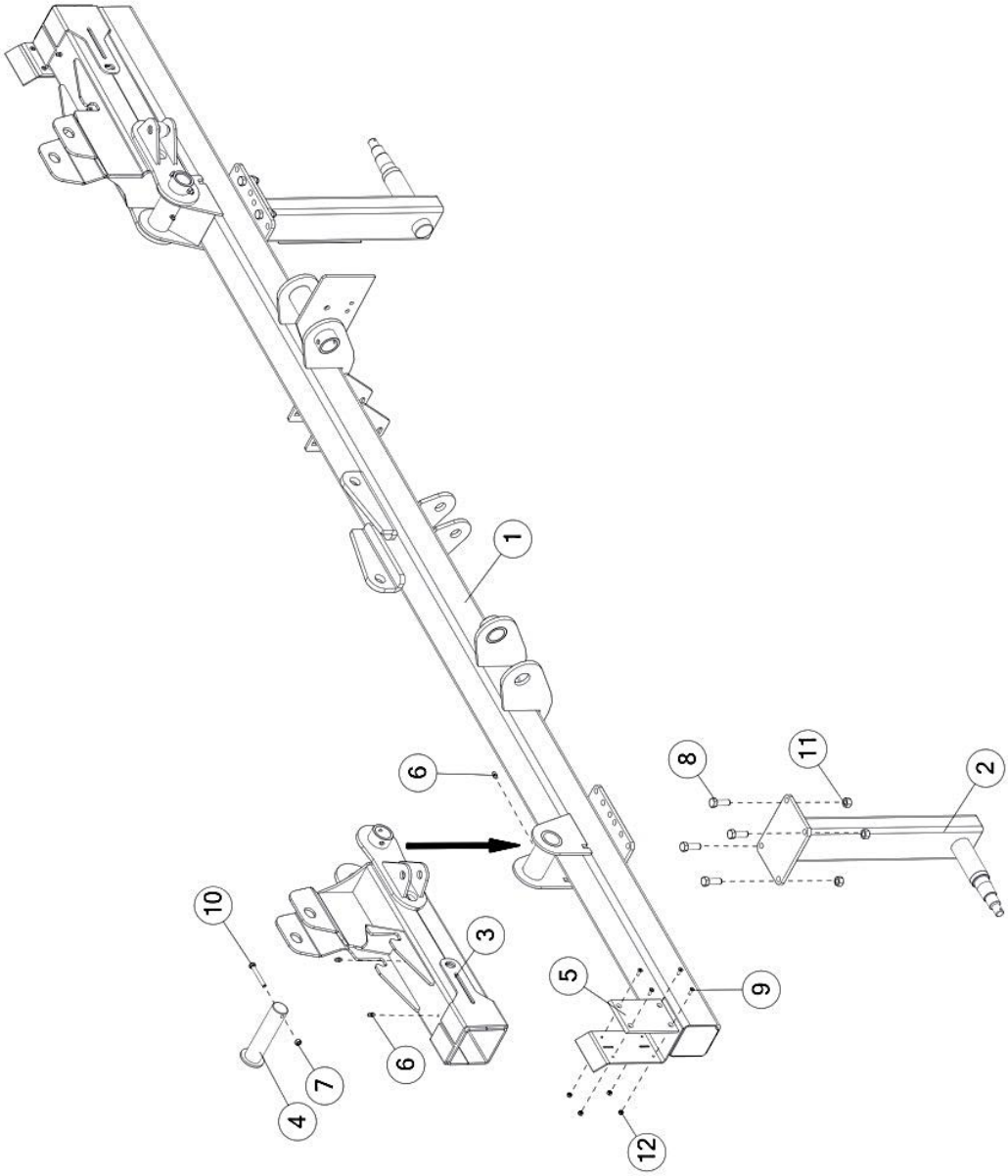

FIGURE 2

SLIDER & COMPONENTS

ITEM	QTY	PART #	DESCRIPTION
1	1	71839	FRAME ASSY, DECAL,
2	2	71881	AXEL WLDMT, RIGHT
3	1	72206	SLIDER HOUSING WLDMNT, RIGHT
*	1	72174	SLIDER HOUSING WLDMNT, LEFT
4	2	72258	WLDMNT, PIVOT ARM PIN SHORT
5	2	72241	POLY HELPER PAD
6	6	G89	STRAIGHT ZERK 1/4-28X90
7	2	YBHH10080	BOLT, 5/16"-18 X 2-1/2" GR 5
8	8	YBHH16030	BOLT, 1/2-13 X 1-1/2 GR 5
9	8	YSFS64010	FLAT HEAD SOCKET CAP SCREW
10	2	YNRL10005	HEX NUT, REVERSIBLE-SIDE LOCK, 5/16-18
11	8	YNRL16005	HEX NUT, REVERSIBLE-SIDE LOCK, 1/2-13
12	8	YNRL64005	HEX NUT, REVERSIBLE-SIDE LOCK, #10-32

*** MEANS NOT SHOWN**

FIGURE 3
HUB ASSEMBLY

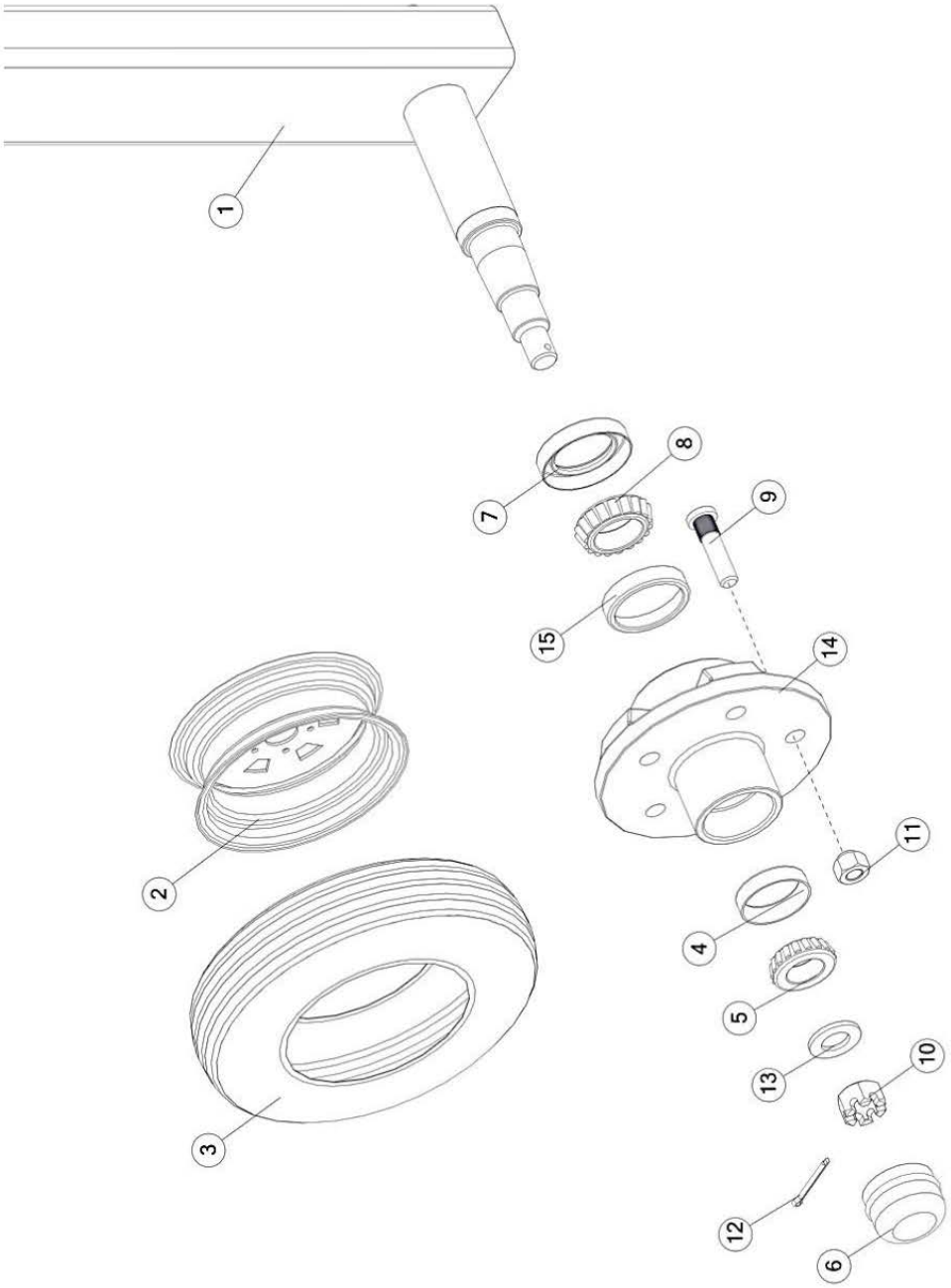

FIGURE 3

HUB ASSEMBLY

ITEM	QTY	PART #	DESCRIPTION
1	2	71881	AXLE WLDMT
2	2	8603	RIM 15 X 5 5 BOLT
3	2	8604	205/75D15 LRC TIRE
4	2	BFR275	RACE
5	2	CAT10	OUTER BEARING
6	2	CAT46	CAP
7	2	CAT5	GREASE SEAL
8	2	CAT6	INNER BEARING
9	10	YBSD16018	STUD BOLT SPECIAL KNURL OD
10	2	YNSL24010	HEX NUT, SLOTTED, 3/4-16,
11	10	YNWL16005	WHEEL NUT, 1/2"-20 UNF
12	2	YPCT05010	COTTER PIN 5/32" X 1-1/2"
13	2	YWFL24010	WASHER, FLAT, SAE 3/4, PLAIN
14	2	CAT8	HUB, 545, 5 BOLT, 1250 LBS, WITH RACES
15	2	CAT7	INNER RACE

FIGURE 4

RAKE BEAM & COMPNENTS

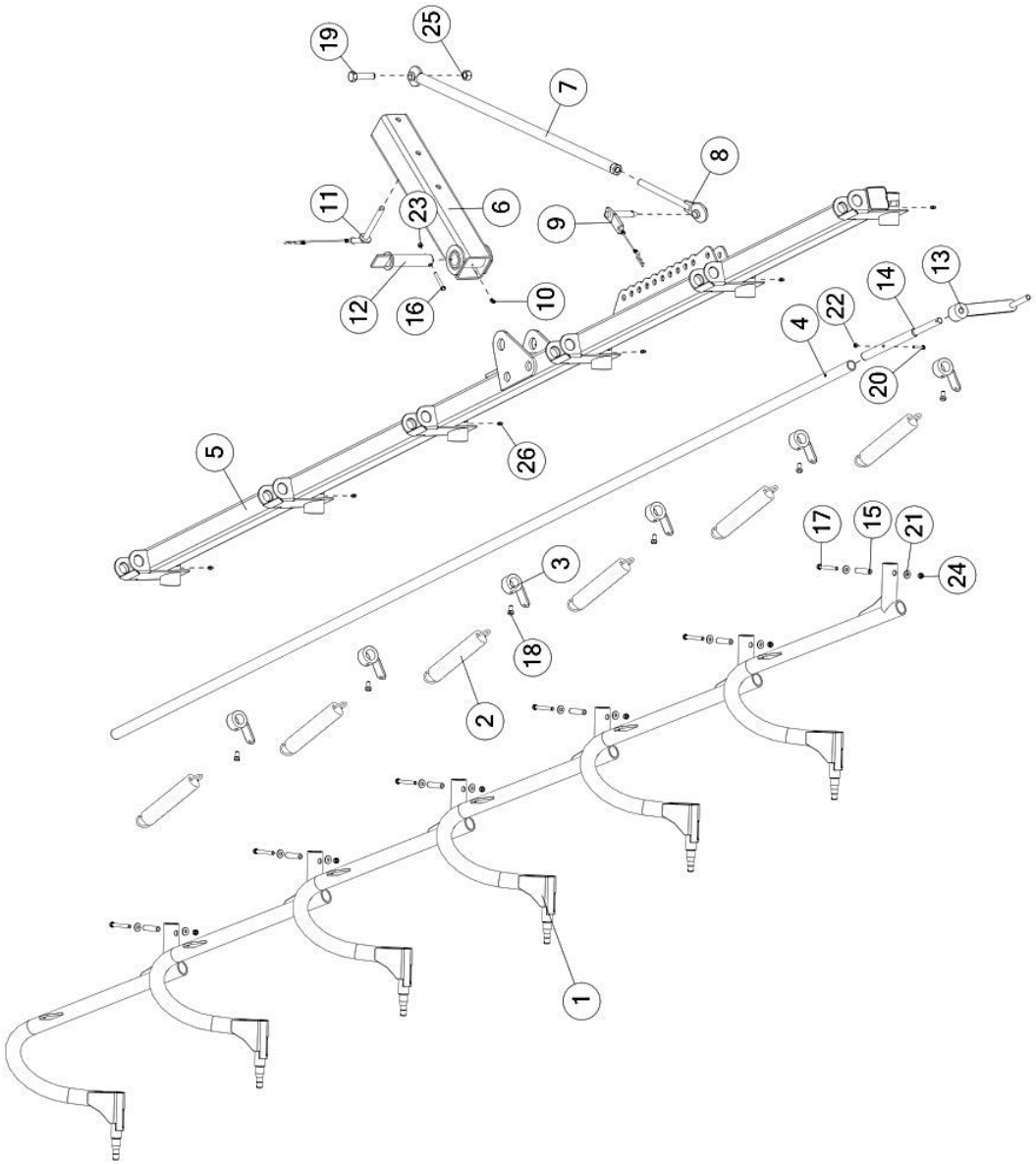

FIGURE 4
RAKE BEAM & COMPONENTS

ITEM	QTY	PART #	DESCRIPTION
1	6	71912	CANDY CANE WLDMNT, RH
*	6	71913	CANDY CANE WLDMNT, LH
2	6	BFR110	SPRING
3	6	BFR431	ASSY, LH SPRING BRACKET
*	6	BFR430	ASSY, RH SPRING BRACKET
4	2	66214	LIFTING PIPE BACK
5	1	72149	RAKE BEAM WELDMENT, RH
*	1	72148	RAKE BEAM WELDMENT, LH
6	2	10WR34	WLDMT, SLIDE ARM
7	2	10WR31	ASSY, LINK ROD
8	2	10WR9	ADJUSTING ROD
9	2	10ERAS20	LANYARD, WIDTH LINK PIN ASSEMBLY
10	2	RG21	GREASE ZERK, 45 DEGREE
11	2	71903	PIN ASSY, ARM SLIDER
12	2	10WR6	ASSY, RAKE BEAM PIN
13	2	71886	WLDMT, HANDLE
14	2	BFR427	RAKE ARM LOCK-UP SHAFT
15	12	66247	SPACER, TUBE
16	2	YBHH10080	BOLT, 5/16 X 2-1/2 GR 5
17	12	YBHH12155	BOLT, 3/8-16 X 3-1/4 GR 5
18	12	YBHH14035	BOLT, 7/16 X 3/4 GR 5
19	2	YBHH24050	BOLT, 3/4 X 3 GR 5
20	2	YBHH10055	BOLT, 5/16 X 1-3/4 GR 5
21	24	YWFL10005	WASHER, FLAT, 5/16 USS
22	2	YNRL08005	HEX NUT, REVERSIBLE-SIDE LOCK, 1/4-20
23	2	YNRL10005	HEX NUT, REVERSIBLE-SIDE LOCK, 5/16-18
24	12	YNRL12005	HEX NUT, REVERSIBLE-SIDE LOCK, 3/8"-16
25	2	YNRL24005	HEX NUT, REVERSIBLE-SIDE LOCK, 3/4-10
26	12	G89	ZERK, 1/4"-28 STRAIGHT

*** MEANS NOT SHOWN**

FIGURE 5
RAKE WHEEL ASSEMBLY

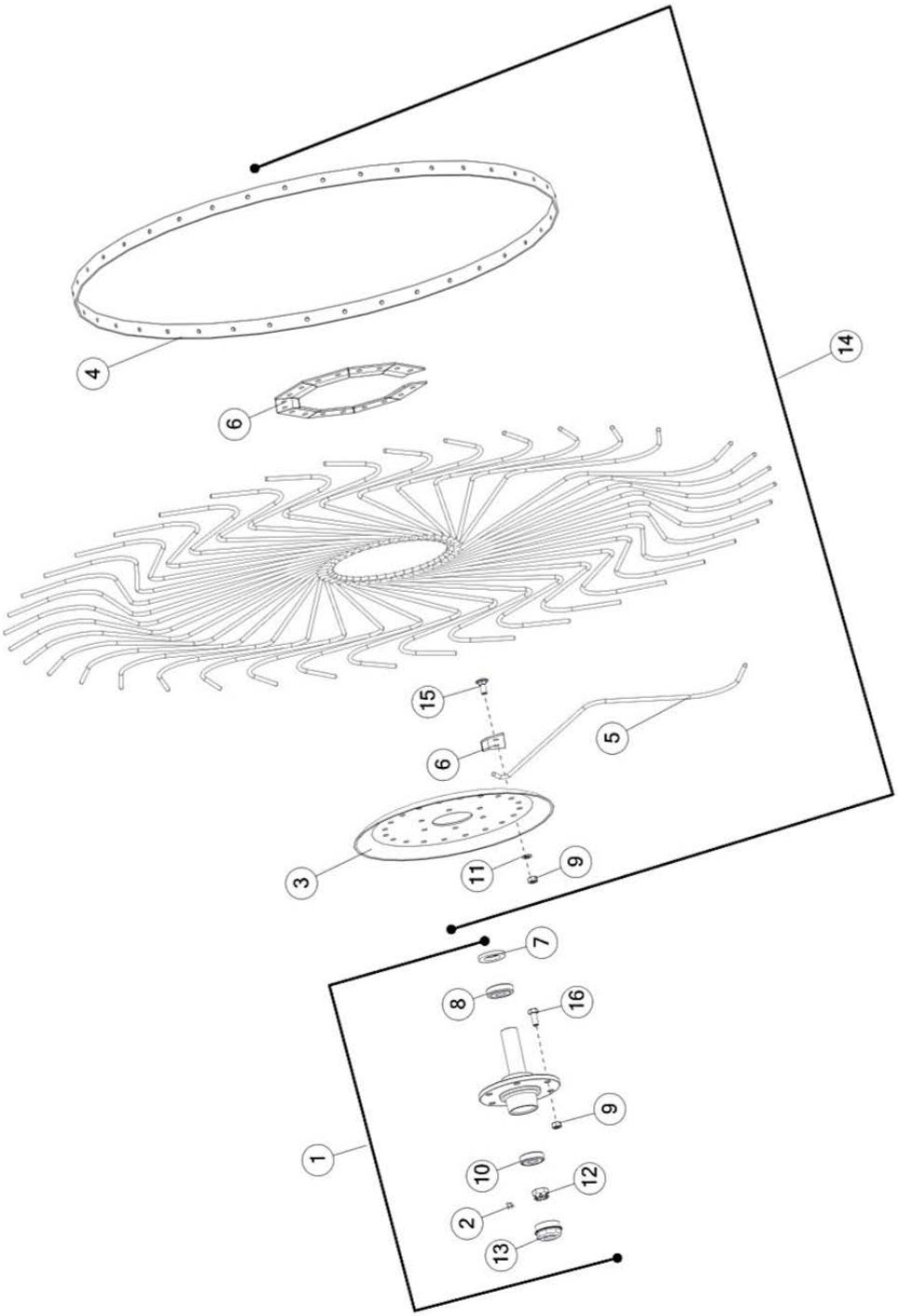

FIGURE 5

RAKE WHEEL ASSEMBLY

ITEM	QTY	PART #	DESCRIPTION
1	10	1081	RAKE WHEEL HUB COMPLETE AND SPINDLE
2	10	1088	CLIP, RETAINING
3	10	FR71	RAKE WHEEL CENTER
4	10	FR72	RAKE WHEEL OUTER RING
5	400	FR73	60" RAKE WHEEL TOOTH
6	100	FR74	RAKE TOOTH CLIP
7	10	T163	SEAL, 2.05 X 1.25 X .25
8	10	600012	INNER BEARING AND RACE
9	260	YNHX76015	HEX NUT, M10-1.5
10	10	600014	OUTER BEARING AND RACE WASHER,
11	200	YWLO76015	LOCK, M10
12	10	T172	NUT, HEX, 18MM - 1.5, CASTLE, G2, NF CAP,
13	10	T173	HUB, RAKE WHEEL
14	5	FR70	60" RIGHT HAND RAKE WHEEL ASSEMBLY
*	5	FR69	60" LEFT HAND RAKE WHEEL ASSEMBLY
15	200	YBCR76005	CARR. BOLT, 10MM X 25MM
16	60	YBHH76015	BOLT, M10-1.5 (25MM)

*** MEANS NOT SHOWN**

FIGURE 6

OPTIONAL - KICKER WHEEL

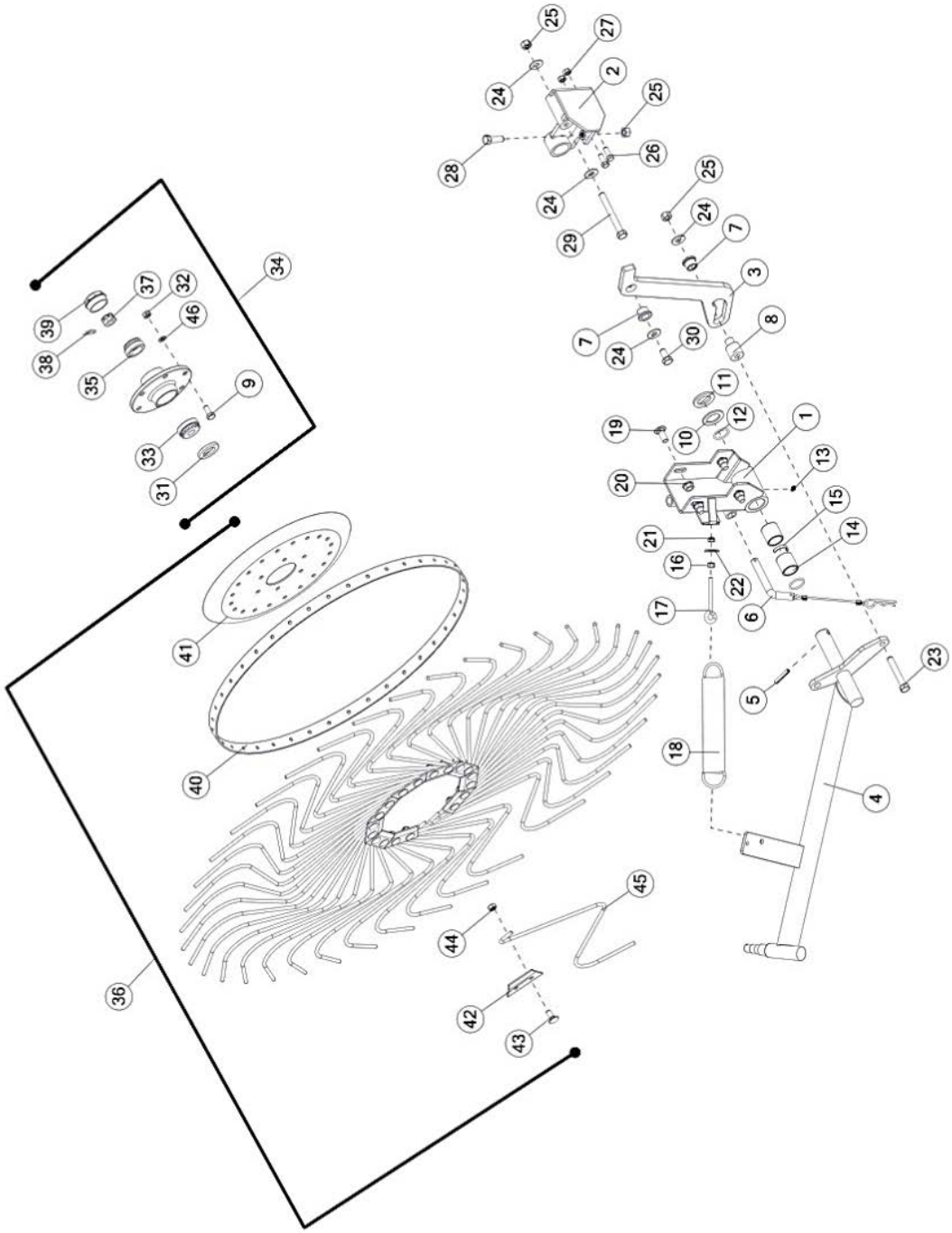

FIGURE 6

OPTIONAL - KICKER WHEEL

ITEM	QTY	PART #	DESCRIPTION
1	1	0240WE04	KICKER MOUNT WELD
2	1	0240WE07	KICKER STOP WELDMENT
3	1	0240HF03	KICKER LEVER LINK FRAME PIVOT
4	1	0240WE03	KICKER ARM WELD
5	1	YPEX10015	EXPANSION PIN, 5/16" X 1-3/4"
6	1	10ERAS08	LANYARD, CANE PIN ASSEMBLY
7	2	8579	POLY PIVOT BEARING
8	1	0240TU04	KICKER PIVOT SPACER LOWER
9	6	YBHH76015	BOLT, M10-1.5 (25MM)
10	1	BFR221	POLY WASHER
11	1	BFR229	WASHER
12	2	S99	O-RING, 218 BUNA-N, 1.50 OD X 1.25 ID ZERK,
13	1	G89	1/4"-28 STRAIGHT
14	2	G16	BRONZE BUSHING 1-1/2" X 1-1/4" X 1-1/2" BEARING
15	1	BFR230	SPACER
16	1	YNHX10005	HEX NUT, 5/16 GR 2
17	1	YBTE10030	TURNED EYE BOLT, 5/16 X 3
18	1	BFR110	KICKER WHEEL SPRING
19	4	YBCR16015	CARR. BOLT, 1/2 X 1-1/4 GR 5
20	4	YNSF16005	HEX NUT, SERRATED FLANGED-LOCK, 1/2"-13 HEX
21	1	YNNY10005	NUT, NYLON LOCKNUT, 5/16-18
22	1	YWFL10010	WASHER, FLAT, 5/16" SAE GR. 8 (YELLOW ZINC)
23	1	YBHH16120	BOLT, 1/2 X 3-1/4 GR 5
24	4	YWFL16005	WASHER, FLAT, 1/2 USS
25	2	YNRL16005	HEX NUT, REVERSIBLE-SIDE LOCK, 1/2-13 BOLT,
26	2	YBHH12010	3/8 X 1 GR 5
27	2	YNRL12005	HEX NUT, REVERSIBLE-SIDE LOCK, 3/8"-16 BOLT,
28	1	YBHH16030	1/2 X 1-1/2 GR 5
29	1	YBHH16140	BOLT, 1/2 X 4-1/2 GR 5
30	1	YBHH16010	BOLT, 1/2 X 1 GR 5
31	1	T163	SEAL, 2.05 X 1.25 X .25
32	6	YBHH76015	BOLT, M10-1.5 (25MM)
33	1	600012	INNER BEARING AND RACE
34	1	1081	RAKE WHEEL HUB AND SPINDLE
35	1	600014	BEARING AND RACE
36	1	10WR17	49" RAKE WHEEL, ASSEMBLY
37	1	T172	NUT, HEX, 18MM - 1.5, CASTLE, G2, NF
38	1	1088	CLIP, RETAINING
39	1	T173	CAP, HUB, RAKE WHEEL
40	1	T177A	RAKE WHEEL OUTER RING
41	1	FR71	RAKE WHEEL CENTER
42	10	FR74	RAKE TOOTH CLIP
43	20	YBCR76005	CARR. BOLT, 10MM X 25MM
44	20	YNHX76015	HEX NUT, M10-1.5
45	40	10WR42	49" RAKE WHEEL TOOTH
46	6	YWLO76015	WASHER, LOCK, M10

FIGURE 7

HYDRAULICS

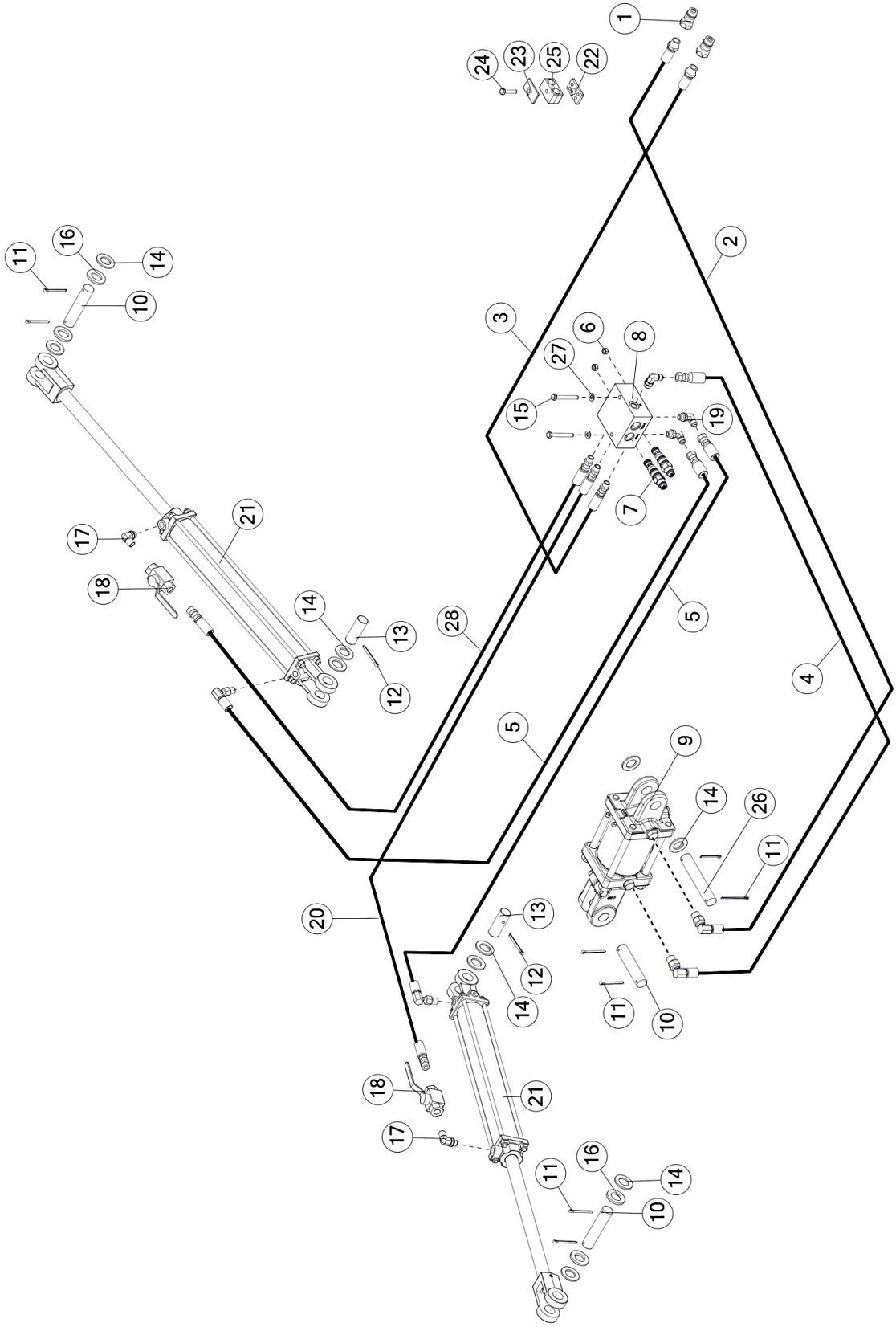

FIGURE 7

HYDRAULICS

ITEM	QTY	PART #	DESCRIPTION
1	2	67148	FTG, ST, 8ORB, QUICK COUPLER TIP
2	1	70101	HSASSM, HYD, 6, 190.0, 1/2 ORB, 1/2 ORB
3	1	70102	HSASSM, HYD, 6, 190.0, 3/8 ORB, 1/2 ORB
4	1	70097	HSASSM, HYD, 6, 20.0 , 1/2 ORB, 3/8 JIC
5	2	70094	HSASSM, HYD, 6, 34.0, 3/8 ORB, 3/8 JIC
6	2	YNRL10005	HEX NUT, REVERSIBLE-SIDE LOCK, 5/16-18
7	2	66920	CARTRIDGE, COUNTERBALANCE
8	1	60426	MANF, HYD, 6, DIST WITH VALVES
9	1	56611	CYLINDER, HYDRAULIC REPHASING
*	1	73227	SEAL KIT
10	3	LW55	PIN, 1.00 X 4.50, CYLINDER
11	8	YPCT06020	COTTER PIN, 3/16 X 2
12	2	YPCT07005	COTTER PIN, 7/32 X 2
13	2	23N107	CYLINDER PIN
14	10	16SV136	WASH, FLAT, 1.75 X 1.02 X 0.13, ZC
15	2	YBHH10080	BOLT, 5/16 X 2-1/2 GR 5
16	2	BFR33	WASHER
17	2	70113	FTG, 90, 9/16ORB, 3/8NPT, STL
18	2	59235	VALVE, BALL, 3/8" HIGH PRESSURE
19	3	CHM268	ELBOW (6 C50X-S)
20	1	72314	HYD HOSE ASSY, 6 X 39.6, 6ORB, 6NPT
21	2	69969	2" X 16" HYDRAULIC CYLINDER WITH PINS 90 DEG TO ORB PORTS
22	2	1021	LINE DOUBLE T2 CLAMP BASE
23	2	56563	CLAMP TOP PLATE
24	2	56568	CLAMP BOLT
25	2	CHM278	3/8 TWO LINE CLAMP BLOCK
26	1	72884	PIN, 1.00 X 5.70, CYLINDER
27	2	YWFL08005	WASHER, FLAT, 1/4 USS
28	1	72315	HYD HOSE ASSY, 6 X 45.1, 6ORB, 6NPT

*** MEANS NOT SHOWN**

FIGURE 8
HYDRAULIC CYLINDER

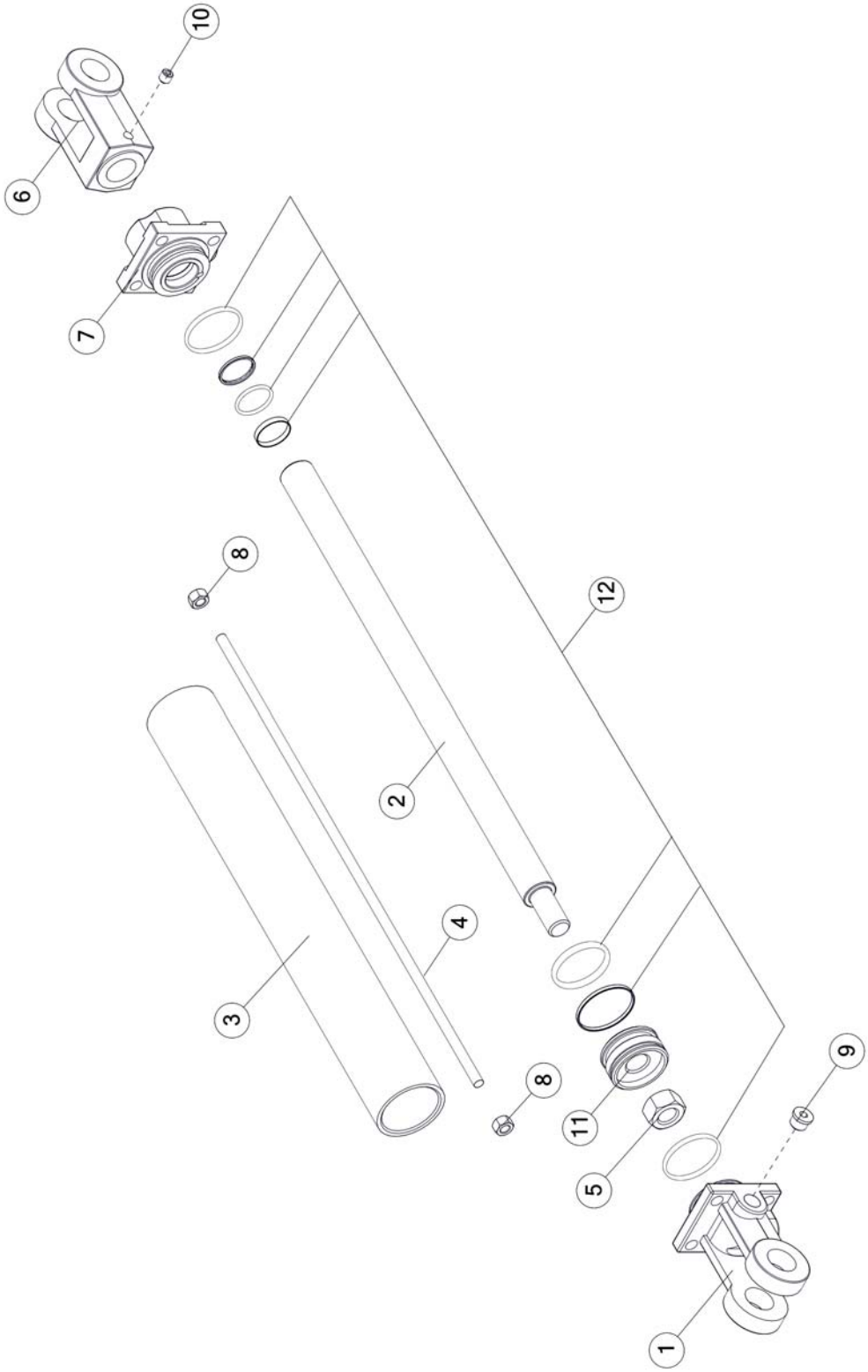

FIGURE 8

HYDRAULIC CYLINDER

ITEM	QTY	PART #	DESCRIPTION
1	1	66932	CLEVIS CAP FOR 2" CYLINDER
2	1	23N145A	ROD
3	1	23N146	CYL. TUBE
4	4	23N147	SHAFT, RND, 0.33 X 20.19
5	1	23N148	PISTON NUT
6	1	23N150A	ROD CLEVIS
7	1	66934	ROD CAP FOR 2" CYLINDERS
8	4	YNHX12005	HEX NUT, 3/8-16 GR 2
9	1	SD270	HOLLOW HEX PLUG 6
10	1	YSSO12015	SET SCREW, SOCKET, 3/8-24 X 3/8
11	1	56180	PISTON FOR 2" CYLINDER
12	6	56187	SEAL KIT FOR 2" CYLINDER
-	1	69969	2" X 16" HYDRAULIC CYLINDER WITH PINS 90 DEG TO ORB PORTS COMPLETE

FIGURE 9
OPTIONAL - WIND GUARD

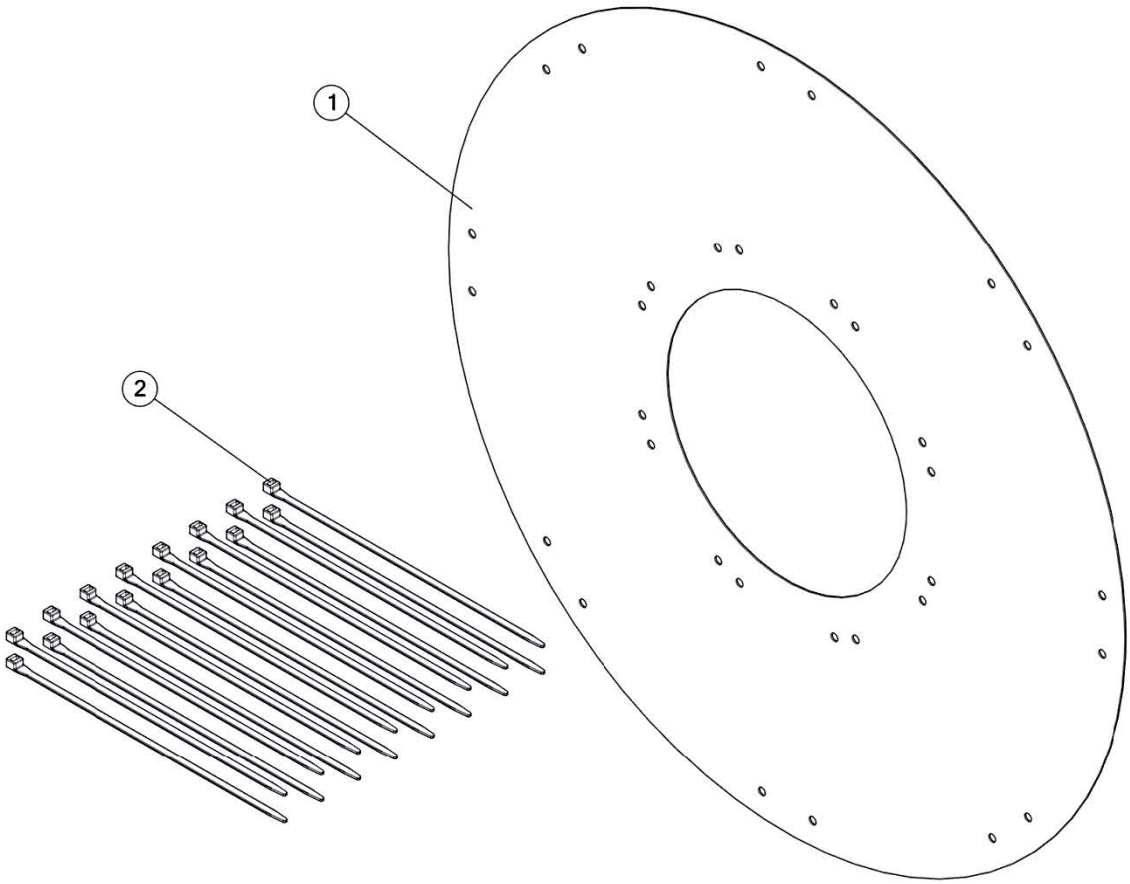

FIGURE 9

OPTIONAL - WIND GUARD

ITEM	QTY	PART #	DESCRIPTION
1	1	59039	POLY WIND GAURD, FOR 60" RAKE
2	16	57626	15 INCH 120# BLACK CABLE TIE

PARTS NOTES

H&S Manufacturing products are approved for the

FEMA SEAL OF QUALITY

P.O. BOX 768, MARSHFIELD, WI 54449
(715) 387-3414 FAX (715) 384-5463
www.hsmfgco.com